ACCESS CONTROL DOOR PHONES Installation and Programming Manual

ITS Telecom

NOTICE

This manual describes the Pantel/Pancode Access Control Door Phones system.

Additional copies of this manual may be obtained from ITS. No part of this document may be reproduced or transmitted in any form, by any means (electronic, photocopying, recording, or otherwise) without the prior written permission of ITS.

ITS reserves the right to modify the hardware and software described in the manual without prior notice. However, changes made to the hardware or software described does not necessarily render this publication invalid.

WARRANTY

In the event that the product proves to be defective in workmanship or materials within a period of one year from date of shipment, ITS shall repair or replace the product at its discretion. Transportation will be the responsibility of the dealer/distributor. **Under no circumstances shall ITS be liable for consequential or special damages, loss of revenue or user/dealer expenses arising out of or in connection with the use or performance of the product, whether based on contract, tort, or any other legal agreement.**

The following shall void the above warranty: malfunctions resulting from fire, accident, neglect, abuse, or acts of God; use of improper electrical power; or repair of, tampering with or alteration of the product by anyone other than ITS authorized personnel.

Pantel
Pancode

Installation and Programming Manual

Version 5, Release 1, December 2005

Table of Contents

1 Introduction

This guide provides installation and programming instructions for the following products:

- Pancode outdoor piezo keypad unit
- Pantel outdoor piezo button unit
- Pancode indoor rubber keypad unit
- Pantel indoor rubber button unit
- Pancode outdoor metal keypad unit
- Pancode outdoor metal button unit

1.1 Pancode

Pancode is a smart wall-mounted access control door phone that is connected to an analog port of a PBX or a Key Telephone System, allowing door entry control. It is available for outdoor installation in an aluminum unit with piezo or metal keypads, or a plastic unit for indoor installation. The unit with a piezo keypad is weatherproof and vandal-resistant.
An aluminum Pancode unit can be equipped with an internal black & white or color high-quality pinhole camera.

NOTE

Only aluminum Pancode units can be equipped with a camera.

Pancode Features

The Pancode unit has the following features:

- Two different operation modes:
  - Standard – direct dialing to any extension
  - Speed-dial – one-touch dialing to internal or external subscribers
- Automatic Busy & Disconnect Cadence Detection
- Door opening from any extension
- Door opening from Bypass Switch button
- Programmable day and night destinations
- High quality speakerphone with volume control
- Entry access code (supports up to four codes in metal keypad aluminum Pancode only)
- Works in conjunction with card readers and security devices
- Simple to operate and program
- Smart looking durable design
- Internal black & white or color high-quality pinhole camera (aluminum Pancode only)

Pancode Physical Description

Figure 1 describes the front panels of the Pancode units.

Pancode Outdoor with Piezo Keypad

Pancode Outdoor with Metal Keypad

Pancode Indoor with Rubber Keypad

Figure 1. Pancode Front Panels

The front panel of the Pancode unit contains a speaker and a Call button, and a microphone at the lower part of the panel. In addition, The Pancode unit also features a keypad. The front panel is attached to the wall using a bracket and screws.
The Pancode units are hardwired units, powered by an external 12V AC transformer, included in the package.
Pancode panels with a metal keypad are equipped with three LEDs that indicate its status (see Figure 2).

Figure 2. Pancode LEDs

Status	LED 1	LED 2	LED 3
Idle	Off	On	Off
First touch on keypad	On	On	On
Code error	Fast Blink	Fast Blink	Fast Blink
Door open	Slow Blink	Slow Blink	Slow Blink

Timeout to return to idle state: 10 seconds after last digit was pressed.

NOTE

The # button on the metal keypad performs a “Call Cancel” function.

1.2 Pantel

The Pantel is a wall-mounted access control door phone, which is connected to an analog port of a PBX or a Key Telephone System. The Pantel is compatible with most known telephone systems and PBX types. With the press of a button, the Pantel dials a pre-defined extension number of up to 20 digits, allowing a conversation to take place and then enables the dialed party to open the door for the caller by pressing touch tone digit(s).
It is available for outdoor installation in an aluminum unit with piezo or metal keypads, or a plastic unit for indoor installation. The unit with a piezo keypad is weatherproof and vandal-resistant. The aluminum Pantel unit can be equipped with an internal black & white or color high-quality pinhole camera.

NOTE

Only aluminum Pantel units can be equipped with a camera.

Features

The outdoor and indoor Pantel units have the following features:

- Dialing to a pre-defined extension/subscriber
- Door opening from any extension
- Door opening from Bypass Switch button
- Programmable day and night destinations
- Automatic Busy & Disconnect Cadence Detection
- Designed for wall mounting
- Works in conjunction with card readers and security devices
- High quality speakerphone with volume control
- Simple to operate and program
- Outdoor or indoor installation
- Internal black & white or color high-quality pinhole camera (aluminium Pantel only)

Physical Description

Figure 3 describes the front panels of the Pantel indoor and outdoor units.

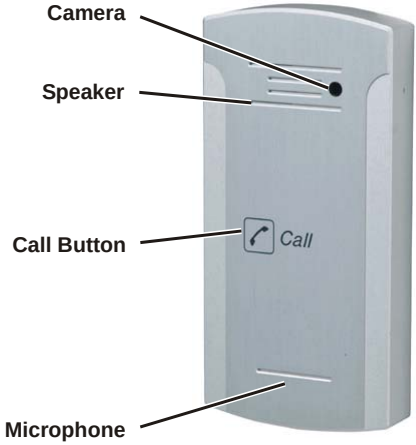

Pantel Outdoor with Piezo Button

Pantel Outdoor with Metal Button

Pantel Indoor with Rubber Button

Figure 3. Pantel Front Panels

The front panel of the Pantel unit contains a speaker and a Call button, and a microphone at the lower part of the unit. The front panel is attached to the wall using a bracket and screws.
The Pantel unit is a hardwired unit powered by an external 12V AC transformer, included in the package.

NOTE

Pressing the Call button a second time on the Pantel Outdoor panel performs a “Call Cancel” function.

2 Installation

The Pantel/Pancode is mounted on the provided installation bracket. This mounting bracket should be installed as shown in Figure 4.

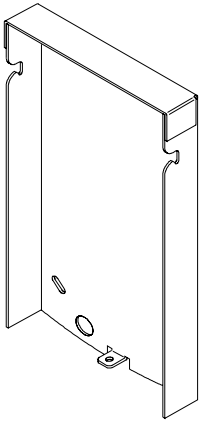

Outdoor Piezo Unit Bracket

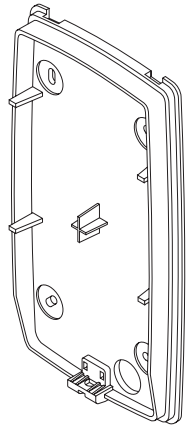

Indoor Unit Bracket

Figure 4. Installation brackets

To install the Pantel/Pancode wall bracket:

1. Measure and mark the location on the wall where the holes will be drilled for the mounting bracket.
2. Drill the holes and insert the wall anchors into the holes.
3. Attach the mounting bracket using the provided wall screws.

2.1 Installation Instructions

Installing the Pantel/Pancode

Power (12V DC) is provided to the camera via an extended connector in the Pancode/Pantel aluminum. The camera is activated, once the relevant instruction is given (such as a push on the call button).

CAUTION

To prevent causing damage to the camera, make sure to connect the correct polarity to the connector (see Figure 5).

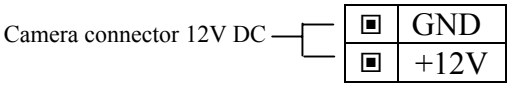

Figure 5. Camera Connector

Pancode/Pantel Schematic setup

Figure 6 details the schematic setup of the Pancode/Pantel unit.

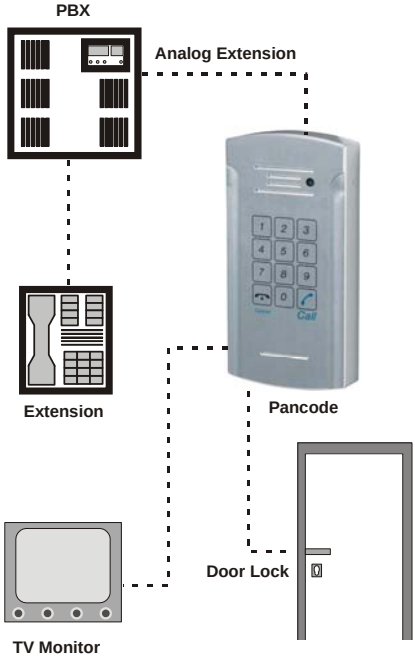

Figure 6. Pancode/Pantel Schematic setup

The video signal is independent and connected directly to third-party video equipment (e.g. a video recorder, monitor, multiplexer, PC, etc.).

The unit is connected to the PBX as an analog extension. The unit powers the door lock and the camera.

Installing the Pantel/Pancode

The Pantel/Pancode can be installed as an individual access control or can be used with adjacent access-control devices, such as card reading devices. For more information on adjacent access-control device installation, see Section 2.2.

A 12V AC external power supply is provided with the Pantel/Pancode unit. The power adapter should not be located further than 10m (30ft) from the Pantel/Pancode.

Figure 7 shows the terminal locations on the wire connector provided with the Pantel/Pancode. This connector is attached at the base of the internal component. All wiring to the Pantel/Pancode is attached to the wire connector.

The Pantel/Pancode supports a bypass switch installation. This allows opening the door with a hardwired switch. A bypass switch should be connect to the SW and /SW terminals.

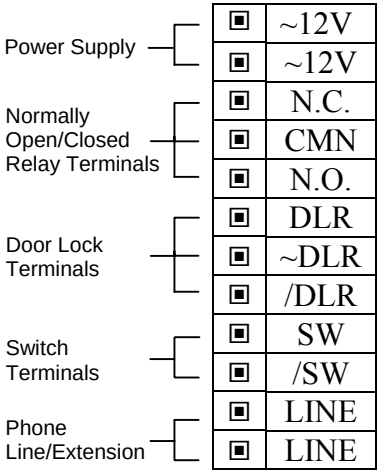

Figure 7. Connector Wiring

NOTE

For the installation of the powered-unlocked-state, use DLR and ~DLR. For the installation of the powered-locked-state, use /DLR and ~DLR (**this is recommended for safety purposes**).

The wiring connector is a screw connector type. In order to attach a wire, you must insert the stripped end of the wire into the proper terminal and tighten the terminal screw. This will crimp the wire connection.

CAUTION

To avoid damage to the Pantel/Pancode, the power supply should be disconnected from mains prior to connecting wires to the Pantel/Pancode unit.

To Install the Pantel/Pancode

1. Remove the cover from the Pantel/Pancode unit and disconnect the wire connector, found at the base of the internal component.
2. Connect the two 12V lead wires from the 12V AC power adapter, one to each of the **"~12V"** terminals.
3. Connect the two PBX extension wires, one to each of the **"LINE"** terminals.
4. Connect the door-lock relay wires to the **"DLR"** and **"~DLR"** terminals

   -or-

   If the door-lock relay is a powered-locked-state type lock, connect the door-lock relay wires to the **"/DLR"** and **"~DLR"** terminals.
5. If a push button switch is used, connect the push button wires to the **"SW"** and the **"/SW"** terminals.
6. Plug the wire connector to the base of the Pantel/Pancode inner component.
7. Place the Pantel/Pancode onto the mounting bracket.
8. Switch on the power to the 12V adapter.

After installation, you can now program the Pantel/Pancode unit. For details on programming, see Section 3.

Installing Pantel/Pancode with a Camera

Power (12V DC) is provided to the camera via an extended connector in the Pancode/Pantel aluminum. The camera is activated, once the relevant instruction is given (such as a push on the call button).

CAUTION

To prevent causing damage to the camera, make sure to connect the correct polarity to the connector (see Figure 8).

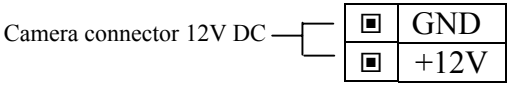

Figure 8. Camera Connector

2.2 Adjacent Access Control Device

This section describes adding an access-control device to an existing Pantel/Pancode, and adding a Pantel/Pancode to an existing access-control device. The key difference between these two installations is which Access-control device controls the door lock relay.

Adding an Access Control Device to the Pantel/Pancode

When activated, the access-control triggers the Pantel/Pancode "SW" terminal, which activates the door-lock relay and opens the door.

For this type of installation, the access-control device "N.O." output wires are connected to the Pantel/Pancode Switch terminals (see Figure 9).

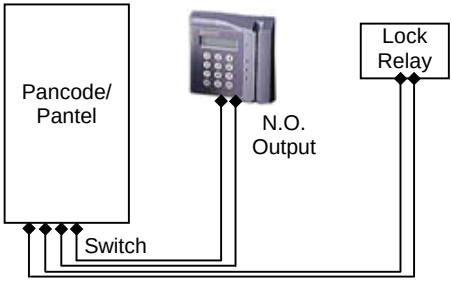

Figure 9. Pantel/Pancode – Controlling Lock Relay

Adding Pantel/Pancode to an Access Control Device

The access control device opens the door when the Pantel/Pancode triggers the access-control device.

For this installation, the access-control device "**Bypass Switch" (SW)** wires are connected to the "**N.O."** and **"CMN"** terminals of the Pantel/Pancode. The door-lock relay wires are connected to the access-control device (see Figure 10).

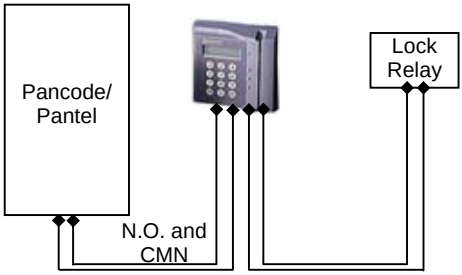

Figure 10. Access Control - Controlling Lock Relay

2.3 Connection Schematics

The Pantel/Pancode offers multiple wiring options.

- **Option 1:** For use with an external device, which requires the Pancode to be set up as "Normally Closed"
- **Option 2:** For use with an external device, which requires the Pancode to be set up as "Normally Open"
- **Option 3:** For use with the powered-unlocked-state lock relay (most common)
- **Option 4:** For use with the powered-locked-state lock relay (**recommended for safety purposes**)

Figure 11 shows the wiring plan for these four options.

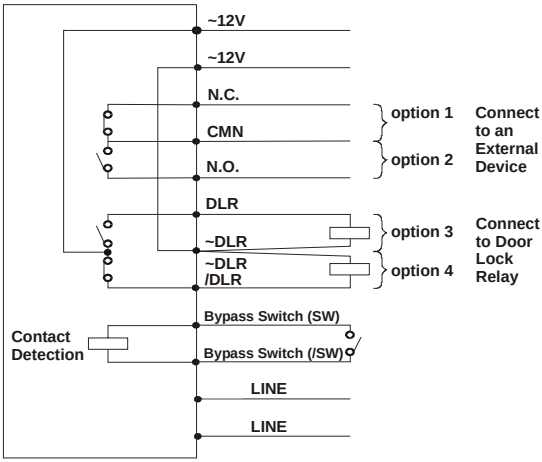

Figure 11. Pantel/Pancode Wiring Schematics

2.4 Volume Control

The volume of the Pantel/Pancode speaker can be adjusted using the volume controller located on the unit's back panel. After installing the unit, test the volume. In case it is too low/high, remove the unit from the mounting bracket and adjust the volume using a small screwdriver.

This page is intentionally left blank

3 Programming

Programming can be done from any telephone or extension on the PBX, using keypad DTMF tones. The following programming functions are discussed in this section:

- Day/Night Mode Selection
- Entering Programming Mode
- Resetting the Pantel/Pancode

3.1 Day/Night Mode Selection

Day and Night mode specify which of the programmed destination numbers, Day or Night number, will be called when the Call button is pressed. The operator can manually change the Day/Night mode.

To change the Day/Night mode:

1. Dial the Pantel/Pancode line/extension from any touch-tone telephone.
2. Wait until the Pantel/Pancode answers and beeps.
3. Enter *80 for Day Mode
   -or-
   Enter *81 for Night Mode.

3.2 Entering Programming Mode

NOTE

You will hear a short confirmation tone every time you enter a correct programming command, or a long error tone every time you enter an incorrect programming command.

To enter the programming mode:

1. Dial the Pantel/Pancode line/extension from any touch-tone telephone.
2. Wait until the Pantel/Pancode answers and beeps.
3. Dial *900 and wait for beep.
4. Enter the Programming Access Password (default password is 1234). Upon entering wrong password three consecutive times, device disconnects.

To exit the programming mode

- Dial *900
  -or-
  If no dialing occurs within 45 seconds, the program mode automatically exits.

3.3 Resetting the Pantel/Pancode

Resetting the Pantel/Pancode will automatically change the parameters in the unit to the manufacturers default.

To reset the unit:

1. Enter programming mode (see Section 3.2, *Entering Programming Mode*).
2. Dial *151.
3. A confirmation tone will be heard.
4. Exit programming mode.

To reset the unit in "speed dial" mode:

1. Enter programming mode (see Section 3.2).
2. Dial *152.
3. A confirmation tone will be heard.
4. Exit programming mode.

3.4 Pantel/Pancode Setup and Operation

The following table contains programming functions, which can be accessed in the programming mode for the Standard Setup and Operation.

Access Door Phone Programming Commands

OPERATION	COMMAND	DEFAULT
The Day/Night DN will be dialed when the Call button is pressed, respective to Day/Night mode. The Error DN is dialed after receiving three invalid Access Code entries in a row	***360 + X + DN + #** where: X = 1 Day X = 2 Night X = 3 Error Destination number (DN) = Up to 20 digits, including *, #, Pause, and A-D characters. For Error = 12 digits. For special character input, see section 0.	Day = 0 Night = 0 Error = No default
Delete a destination number assigned to Day, Night, or Error DNs. This command must be entered separately for each X value	***360 + X + #** where: X = 1 Day X = 2 Night X = 3 Error	
Programming the prefix-digit(s) for PBX extensions dialing. When beginning with these digits, the units will process them as extension dialing	***170 + prefix-digit(s) + #** Maximum 4 digits (Do Not use * or # as prefix digit) To cancel this operation, enter: ***170 + #**	No default
Digit(s) to open the door from any extension	***441 +XXXX + #** where: XXXX= Digits (0-9) Note: Up to 4 digits.	8

OPERATION	COMMAND	DEFAULT
Changing the Opening door Access Code	***442 + (New Access Code)** Access Codes can be up to four numeric digits. If the New Access Code is less than four numeric digits, press the # following the entry of the digits. Allowable characters are 0 through 9. Do not use the * or # keys. **Note**: The access code cannot begin with the same prefix digits as PBX extension numbers	9876
Changing the door opening access code (for metal keypad units only)	***442 + X + (New Access Code)** where x=1-4 (code number)	1-9876 2-empty 3-empty 4-empty
Erasing door opening access code (for metal keypad units only)	***442 + X + #** where x=1-4 (code number)	
Time between DTMFs	***460 + X** where: X = 1-9 (Each step is 200 msec)	2 (400)
Conversation time limit (sec)	***462 + XX** where: XX = Seconds (10-99) 00 = Unlimited	45 sec
Door opening time limit (sec)	***464 + X** where: X = Number of seconds (1-9)	3 sec

OPERATION	COMMAND	DEFAULT
Number of cycles to Busy detection	***500 + X** where: X= 0 – 9 (0 – no busy detection, 1 – 2 cycles, 2 – 4 cycles, etc.)	3 (6 cycles)
Loop disconnect detection	***550 + X** where: X = 0 off X = 1 on	1
Changing the programming password	***600 + (new password)** Programming access password must be four numeric digits. Allowable characters are 0 through 9. Do not use the * or # keys.	1234
Camera instructions*	***620 + X** X = 0 camera off X = 1 camera on X = 2 camera powered when call button is pressed X = 3 camera powered when any key is pressed	0

NOTE

Camera instructions apply to Pancode/Pantel units with an installed camera.

Pancode Speed-Dial Setup

Pancode can also work in Speed-Dial mode. In this mode, keys 1-9 can be assigned destination phone numbers. When a key is pressed, the assigned destination number is dialed.

Speed-Dial Setup

The following table contains programming functions, which can be accessed in the programming mode for Speed-Dial mode operation.

Access Door Phone Programming Commands

OPERATION	COMMAND	DEFAULT
Assigning a Speed-Dial destination number. This command must be entered separately for each X value	***120 + X + DN + #** X = a digit 1 through 9 DN = Destination number (DN) = Up to 20 digits, including *, #, Pause, and A-D characters. For special character input, see section 3.5.	No default
Canceling a Speed-Dial destination number. This command must be entered separately for each X value	***120 + X + #** X = a digit 1 through 9	No default
The Day/Night DN will be dialed when the Call button is pressed, respective to Day/Night mode. The Error DN is dialed after receiving three invalid Access Code entries in a row	***360 + X + DN + #** where: X = 1 Day X = 2 Night X = 3 Error Destination number (DN) = Up to 20 digits, including *, #, Pause, and A-D characters. For special character input, see section 3.5.	Day = 0 Night = 0 Error = No default

OPERATION	COMMAND	DEFAULT
Delete a destination number assigned to Day, Night, or Error DNs. This command must be entered separately for each X value	***360 + X + #** where: X = 1 Day X = 2 Night X = 3 Error	
Defining the digit(s) to open the door from any extension	***441 + XXXX + #** XXXX= Digits (0-9) Note: Up to 4 digits	8
Changing the Opening door Access Code	***442 + 0XXX+#** 0XXX = New Access Code up to four digits. The first digit of the access code in Speed-dial mode must be 0. If the new access code is less than four numeric digits, press the # key following entry of the digits. The allowable characters are 0 through 9. Do not use the * or # keys.	0123
Changing the door opening access code (for metal keypad units only)	***442 + X + (New Access Code)** where x=1-4 (code number)	1-0123 2-empty 3-empty 4-empty
Erasing door opening access code (for metal keypad units only)	***442 + X + #** where x=1-4 (code number)	
Time between DTMF's	***460 + X** where: X = 1-9 (Each step is 200 msec)	2 (400)
Conversation time limit (sec)	***462 + XX** XX = Seconds (10-99) 00 = Unlimited	45 sec

OPERATION	COMMAND	DEFAULT
Door opening time limit (sec)	***464 + X** XX = Number of seconds (1-9)	3 sec
Number of cycles to Busy detection	***500 + X** where: X= 0 – 9 (0 – no busy detection, 1 – 2 cycles, 2 – 4 cycles, etc.)	3 (6 cycles)
Loop disconnect detection	***550 + X** where: X = 0 off X = 1 on	1
Changing the programming password	***600 + (new password)** Programming access passwords must be four numeric digits. The allowable characters are 0 through 9. Do not use the * or # keys.	1234
Camera instructions*	***620 + X** X = 0 camera off X = 1 camera on X = 2 camera powered when call button is pressed X = 3 powered by any touch on unit keypad	0

NOTE

Camera instructions apply to Pancode/Pantel units with an installed camera.

3.5 Entering Special DTMF Characters

Special character/s in destination numbers can be entered using the telephone keypad. The following table shows the corresponding keypad entries needed for creating special DTMF characters.

DTMF CHAR.	NUMBER TO DIAL
Digits 0-9	0-9
*	**
Pause	*1, indicates a 1 second pause
#	*4
A	*5
B	*6
C	*7
D	*8

This page is intentionally left blank

4 Specifications

4.1 General Specifications

Power Supply (External)	12V AC@1.6A (supplied with unit)
Line Voltage	24-72V DC
DC Leakage	< 10 µA
On-Hook Insulation (Resistance Between Line Terminal and Ground)	0-100V DC > 5MΩ 100-200 V DC > 30 KΩ 500V AC/50Hz > 20KΩ 100V AC/25Hz > 100KΩ
Ring Capacitor	0.47 µF ±10%
On-Hook Impedance	@50V DC, 40V AC/25Hz>3000Ω
Ring Detect	27-100 V AC/16-60 Hz
DC Resistance (Off-Hook)	24-66V DC @ 20-100mA/350Ω
Impedance (Off-Hook)	300-3400Hz 500-700Ω
Imbalance Ratio	300-3400Hz > 46dB
Return Loss	300-3400Hz > 18dB
Current During Break	< 700 µA
DTMF Transmission:	
Frequency Tolerance	±1.5%
Frequency Level (High)	-6 to –8dBm
Frequency Level (Low)	-8 to –10dBm
Inter-Digit Pause Time	70-80ms
Relay Switching Current	2A max
Dimensions	
Outdoor Unit	19.4cm x 10.2cm/7.6inch x 4.0inch
Indoor Unit	18.5cm x 9.5cm/7.3inch x 9.5inch
Operating Temperature	Outdoor: -20ºC to +50ºC/4ºF to 122ºF Indoor: 0ºC to +35ºC/32ºF to 95ºF

4.2 Camera Specifications

Black and White Camera

Model no.	MK-03261C
TV System	EIA/CCIR
Image Sensor Device	1/3” interline transfer CCD
Image Sensor Area	4.8mm x 3.6mm
Horizontal Frequency	15.625KHz
Vertical Frequency	50Hz
Total Pixels	542(H) x 582(V)
Scanning System	625 lines, 50 fields/sec CCIR
Resolution	420 TVL horizontal
Minimum Illumination	0.5 Lux at F2.0
Electronic Shutter	Auto Electronic Shutter 1/50 to 1/100000 sec. Continual
S/N Ratio	Better than 48 dB
Video Signal Output	1.0Vp-p composite video signal at 75 ohm load
Gamma Correction	0.45
Gain Control	Auto Gain Control (AGC)
Lens & View Angle	5.5 mm F5.5 / 60°

Color Camera

Model no.	MTV-54KOPI
TV System	PAL/NTSC
Image Sensor	¼-inch CCD Image Sensor
CCD Total Pixels	542(H) x 586(V)
SYNC System	Internal
Minimum Illumination	0.5 Lux F1.2 5600°K
Resolution	380 TVL/470 TVL (Enhanced)
S/N Ratio	52dB (MIN)/60dB(TYP) (AGC OFF)
White Balance	ATW/AWB/FIX (Zero color rolling)
White Balance Range	AWB, ATW (3200---10000°K) /FIX(3299°K)/
Electronic Shutter	1/50-1/120000 sec.
Video Output	1.0Vp-p composite video signal at 75 ohm
Gamma Correction	0.45
Gain Control	AGC
Lens & View Angle	45° > 0.7 mm

This page is intentionally left blank

5 Comparative Table

	Pancode		Pantel	
	Outdoor	Indoor	Outdoor	Indoor
Installation	Outdoor	Indoor	Outdoor	Indoor
Case Type	Aluminum	Plastic	Aluminum	Plastic
Entry Access Code	Yes	Yes	N/A	N/A
Internal Door Opening Code from Any Extension	Yes	Yes	Yes	Yes
Day/Night Mode	Yes	Yes	Yes	Yes
Direct Dialing to any Extension	Yes	Yes	N/A	N/A
Busy and Disconnect Detection	Auto	Auto	Auto	Auto
Speed Dial Mode	Yes	Yes	N/A	N/A
16 DTMF Character Support	Yes	Yes	Yes	Yes
High Quality Speakerphone	Yes	Yes	Yes	Yes
Volume Control	Yes	Yes	Yes	Yes
Vandal Resistant	Yes	No	Yes	No
Supports 12V AC/DC	Yes	Yes	Yes	Yes
Supports 24V DC	Yes	No	Yes	No
Camera option	Yes	No	Yes	No
				

29 Hametzuda Street
58001 Azur, Israel
Tel: +972-3-5576866
Fax: +972-3-5576942