H3C S5170-EI & S5570S-EI Switch Series

Installation Guide

New H3C Technologies Co., Ltd.
http://www.h3c.com

Document version: 6W101-20221011

Copyright © 2022, New H3C Technologies Co., Ltd. and its licensors

All rights reserved

No part of this manual may be reproduced or transmitted in any form or by any means without prior written consent of New H3C Technologies Co., Ltd.

Trademarks

Except for the trademarks of New H3C Technologies Co., Ltd., any trademarks that may be mentioned in this document are the property of their respective owners.

Notice

The information in this document is subject to change without notice. All contents in this document, including statements, information, and recommendations, are believed to be accurate, but they are presented without warranty of any kind, express or implied. H3C shall not be liable for technical or editorial errors or omissions contained herein.

Environmental protection

This product has been designed to comply with the environmental protection requirements. The storage, use, and disposal of this product must meet the applicable national laws and regulations.

Preface

H3C S5170-EI & S5570S-EI Switch Series Installation Guide describes the installation, power-on, maintenance, and troubleshooting of the H3C S5170-EI & S5570S-EI switch series.

This preface includes the following topics about the documentation:

- Audience.
- Conventions.
- Documentation feedback.

Audience

This documentation is intended for:

- Network planners.
- Field technical support and servicing engineers.
- Network administrators working with the S5170-EI & S5570S-EI switch series.

Conventions

The following information describes the conventions used in the documentation.

Command conventions

Convention	Description
Boldface	**Bold** text represents commands and keywords that you enter literally as shown.
Italic	*Italic* text represents arguments that you replace with actual values.
[ ]	Square brackets enclose syntax choices (keywords or arguments) that are optional.
{ x | y | ... }	Braces enclose a set of required syntax choices separated by vertical bars, from which you select one.
[x | y | ...]	Square brackets enclose a set of optional syntax choices separated by vertical bars, from which you select one or none.
{ x | y | ... } *	Asterisk marked braces enclose a set of required syntax choices separated by vertical bars, from which you select a minimum of one.
[x | y | ...] *	Asterisk marked square brackets enclose optional syntax choices separated by vertical bars, from which you select one choice, multiple choices, or none.
&<1-n>	The argument or keyword and argument combination before the ampersand (&) sign can be entered 1 to n times.
#	A line that starts with a pound (#) sign is comments.

GUI conventions

Convention	Description
Boldface	Window names, button names, field names, and menu items are in Boldface. For example, the **New User** window opens; click **OK**.
>	Multi-level menus are separated by angle brackets. For example, **File** > **Create** > **Folder**.

Symbols

Convention	Description
WARNING!	An alert that calls attention to important information that if not understood or followed can result in personal injury.
CAUTION:	An alert that calls attention to important information that if not understood or followed can result in data loss, data corruption, or damage to hardware or software.
IMPORTANT:	An alert that calls attention to essential information.
NOTE:	An alert that contains additional or supplementary information.
TIP:	An alert that provides helpful information.

Network topology icons

Convention	Description
	Represents a generic network device, such as a router, switch, or firewall.
	Represents a routing-capable device, such as a router or Layer 3 switch.
	Represents a generic switch, such as a Layer 2 or Layer 3 switch, or a router that supports Layer 2 forwarding and other Layer 2 features.
	Represents an access controller, a unified wired-WLAN module, or the access controller engine on a unified wired-WLAN switch.
	Represents an access point.
	Represents a wireless terminator unit.
	Represents a wireless terminator.
	Represents a mesh access point.
	Represents omnidirectional signals.
	Represents directional signals.
	Represents a security product, such as a firewall, UTM, multiservice security gateway, or load balancing device.
	Represents a security module, such as a firewall, load balancing, NetStream, SSL VPN, IPS, or ACG module.

Examples provided in this document

Examples in this document might use devices that differ from your device in hardware model, configuration, or software version. It is normal that the port numbers, sample output, screenshots, and other information in the examples differ from what you have on your device.

Documentation feedback

You can e-mail your comments about product documentation to info@h3c.com.

We appreciate your comments.

Contents

Preparing for installation 1

Safety recommendations 2
Examining the installation environment 2
Cleanliness 4
Corrosive gas limit 4
Examining the installation site 5
Checking power distribution or power supply environment 6
Laser safety 6
Installation tools 7
Installation accessories 7

Installing the switch 1

Installing the switch in a 19-inch rack 2
Installation methods 2
Installation procedure at a glance 3
Rack-mounting the switch by using front mounting brackets 3
Rack-mounting the switch by using front and rear mounting brackets 6
Mounting the switch on a workbench 9
Grounding the switch 9
Grounding the switch by using a grounding strip 10
Grounding the switch by using a grounding conductor buried in the earth ground 11
Verifying the connection after grounding the switch 11
Installing and removing a power supply 12
Installing/removing a power supply (1) 13
Installing/removing a power supply (2) 15
Connecting the power cord 17
Connecting the power cord for a built-in power supply 18
Connecting the power cord for a CA-70A12 or PSR75-12A power supply 19
Connecting the power cord for a PSR150-D1 or PSR560-56D power supply 20
Connecting the power cord for a PSR180-56A, PSR360-56A, PSR720-56A, PSR1110-56A, PSR600-54A-B, PSR920-54A-B, or PSR1600-54A-B power supply 21
Verifying the installation 21

Accessing the switch for the first time 1

Connecting the switch to a configuration terminal 1
Connecting a DB9-to-RJ45 console cable 1
Connecting a USB-to-RJ45 console cable 2
Setting terminal parameters 4
Starting the switch 4
Pre-start checklist 4
Powering on the switch 5

Setting up an IRF fabric 1

IRF fabric setup flowchart 1
Planning IRF fabric setup 2
Planning IRF fabric size and the installation site 2
Identifying the master switch and planning IRF member IDs 2
Planning IRF topology and connections 3
Identifying physical IRF ports on the member switches 4
Planning the cabling scheme 4
Configuring basic IRF settings 6
Connecting the physical IRF ports 6
Verifying the IRF fabric setup 6

Maintenance and troubleshooting 1

Power supply failure 1
Built-in power supply failure 1

Removable power supply failure 1
Fan tray failure 2
Configuration terminal display issues 2
No display 2
Garbled display 2

Preparing for installation

This document is applicable to the following Ethernet switches:

Table 1 Switch series and models

Switch series	Model	Product code (PID)
S5170-EI switch series	S5170-28S-EI	LS-5170-28S-EI
		LS-5170-28S-EI-GL
	S5170-54S-EI	LS-5170-54S-EI
		LS-5170-54S-EI-GL
	S5170-54S-EI-DP	LS-5170-54S-EI-DP
	S5170-28S-HPWR-EI	LS-5170-28S-HPWR-EI
		LS-5170-28S-HPWR-EI-GL
	S5170-54S-PWR-EI	LS-5170-54S-PWR-EI
		LS-5170-54S-PWR-EI-GL
	S5170-36F-EI	LS-5170-36F-EI
	S5170-36F-EI-DP	LS-5170-36F-EI-DP
S5570S-EI switch series	S5570S-28S-EI	LS-5570S-28S-EI
		LS-5570S-28S-EI-GL
	S5570S-54S-EI	LS-5570S-54S-EI
		LS-5570S-54S-EI-GL
	S5570S-28S-HPWR-EI	LS-5570S-28S-HPWR-EI
	S5570S-28S-HPWR-EI-A	LS-5570S-28S-HPWR-EI-A
		LS-5570S-28S-HPWR-EI-A-GL
	S5570S-54S-PWR-EI	LS-5570S-54S-PWR-EI
	S5570S-54S-PWR-EI-A	LS-5570S-54S-PWR-EI-A
		LS-5570S-54S-PWR-EI-A-GL
	S5570S-36F-EI	LS-5570S-36F-EI
		LS-5570S-36F-EI-GL
	S5570S-54F-EI	LS-5570S-54F-EI
		LS-5570S-54F-EI-GL
	S5570S-30MS-UPWR-EI	LS-5570S-30MS-UPWR-EI

NOTE:

- Switches of the same model but different PIDs might differ in hardware and software features. You can view the PID of a switch on the label located on its rear panel or top panel.
- The available chassis models and accessories vary by country and region. This document describes only the preceding models. For the chassis models and accessories available in your country or region, contact the local H3C marketing personnel.

Safety recommendations

To avoid any equipment damage or bodily injury caused by improper use, read the following safety recommendations before installation. Note that the recommendations do not cover every possible hazardous condition.

- Before cleaning the switch, remove all power cords from the switch. Do not clean the switch with wet cloth or liquid.
- Do not place the switch near water or in a damp environment. Prevent water or moisture from entering the switch chassis.
- Do not place the switch on an unstable case or desk. The switch might be severely damaged in case of a fall.
- Ensure good ventilation of the equipment room and keep the air inlet and outlet vents of the switch free of obstruction.
- Make sure the power input voltage is as required by the power supply.
- To avoid electrical shocks, do not open the chassis while the switch is operating or when the switch is just powered off.
- During switch installation, wear an ESD wrist strap. Make sure the strap makes good skin contact and is reliably grounded.

Examining the installation environment

To ensure correct operation of your switch, make sure the installation environment meets the requirements listed in Table 2.

Table 2 Checking list for the installation environment

Item	Requirements
Ventilation and heat dissipation	**CAUTION:** To ensure correct operation of your device, make sure the installation environment is adequately ventilated to prevent the switch from overheating. • Ensure a minimum clearance of 10 cm (3.94 in) around the chassis. • Do not install the device near a heat source, for example, a stove or heater. • Ensure air ventilation in the installation environment. • Do not block the ventilation holes in the device or power adapter.
Anti-moisture	**CAUTION:** Water or moisture might damage the circuits of the device. • Do not place the device near water or in a damp environment. • Install the switch in a clean, dry, and ventilated place where temperature is controlled in a stable range. • Make sure the installation environment is free from water leakage or condensation. If required, install a dehumidification device (such as an air conditioner with a dehumidification function or a dedicated dehumidifier). • Do not operate the device under or near the water source, such as the wash basin, laundry room, or areas with high humidity. • Do not touch the device with wet hands.
Temperature/humidity	For correct operation and long service life of your switch, maintain the temperature and humidity in the equipment room at acceptable ranges.

Item	Requirements
	• Lasting high relative humidity can cause poor insulation, electricity leakage, mechanical property change of materials, and metal corrosion. • Lasting low relative humidity can cause washer contraction and ESD and cause issues including loose mounting screws and circuit failure. • High temperature can accelerate the aging of insulation materials and significantly lower the reliability and lifespan of the switch. For the temperature and humidity requirements of the switch, see technical specifications in *H3C S5170-EI & S5570S-EI Switch Series Hardware Information and Specifications.*
Lightning protection	△ **CAUTION:** Ground the switch correctly and verify the grounding. For more information, see "Grounding the switch." • If you ground the switch by using a grounding strip, make sure the grounding resistance of the grounding strip in the equipment room is less than 1Ω. • If you ground the switch by using a grounding conductor buried in the earth ground, make sure the grounding resistance of the grounding conductor in the ground is less than 10Ω. • Route the signal cables along indoor walls, bury the cables in the earth ground, or thread the cables through steel tubes. Install a signal lightning arrester with a nominal discharge current for a corresponding network interface. • Keep the signal cables far from power cords and lightning rod down conductors. • As a best practice, route power cords indoors. If an AC power cord is routed from outdoors, connect the AC power cord first to a power lightning arrester before leading it to the AC power port on the switch. Make sure the power lightning arrester has a nominal discharge current and the total length of the power cord from the power lighting arrester to the power port on the switch is less than 5 m (16.40 ft). • Ground the switch, rack, independent power supplies, and lightning arresters separately. • You must ground optical fibers with reinforcing metal stiffener from outdoors on an optical distribution frame (ODF) or fiber splice enclosure.
Cable routing	△ **CAUTION:** Do not run an Ethernet cable and power cord in parallel. • Route different types of cables separately. • Keep power cords a minimum of 5 cm (1.97 in) away from other cables.
ESD prevention	• Ground the switch correctly. • To avoid ESD damage to the device or FRUs, always wear an ESD wrist strap when you install or remove the device or FRUs. • Make sure the wrist strap has good skin contact and is reliably grounded.
Cleanliness	For more information, see "Cleanliness."
Corrosive gas prevention	The installation site must be free from corrosive gases such as acid gases and alkaline gases. For more information, see "Corrosive gas limit."
EMI	• If AC power is used, use a single-phase three-wire power receptacle

Item	Requirements
	with protection earth (PE) to filter interference from the power grid. • Keep the device far away from radio transmitting stations, radar stations, and high-frequency devices. • Use electromagnetic shielding, for example, shielded interface cables, when necessary.

Cleanliness

Dust buildup on the chassis might cause electrostatic adsorption and dust corrosion, resulting in poor contact of metal connectors and contact points. This might shorten the device's lifetime and even cause device failure in the worst case. Table 3 describes the switch requirement for cleanliness.

Table 3 Switch requirement for cleanliness

Substance	Particle diameter	Concentration limit
Dust particles	≥ 0.5 μm	≤ 1.8×10^7 particles/m^3

To maintain cleanliness in the equipment room, follow these guidelines:

- Keep the equipment room away from pollution sources. Do not smoke, eat, or drink in the equipment room.
- Use double-layer glass in windows and seal doors and windows with dust-proof rubber strips. Use screen doors and window screens for doors and windows open to the outside and make sure the external windows are air tight.
- Use dustproof materials for floors, walls, and ceilings and use wallpaper or matt paint that does not produce powders.
- Clean the equipment room regularly and clean the air filters of the rack each month.
- Wear ESD clothing and shoe covers before entering the equipment room, keep the ESD clothing and shoe covers clean, and change them frequently.

Corrosive gas limit

Corrosive gases can accelerate corrosion and aging of metal components. Make sure the corrosive gases do not exceed the concentration limits as shown in Table 4.

Table 4 Corrosive gas concentration limits

Gas	Average concentration (mg/m^3)	Maximum concentration (mg/m^3)
SO_2	0.3	1.0
H_2S	0.1	0.5
Cl_2	0.1	0.3
HCl	0.1	0.5
HF	0.01	0.03
NH_3	1.0	3.0
O_3	0.05	0.1
NO_X	0.5	1.0

CAUTION:

As a best practice, control the corrosive gas concentrations in the equipment room at their average values. Make sure the corrosive gas concentrations do not exceed 30 minutes per day at their maximum values.

To control corrosive gases, use the following guidelines:

- As a best practice, do not build the equipment room in a place with a high concentration of corrosive gases.
- Make sure the equipment room is not connected to sewer, vertical shaft, or septic tank pipelines and keep it far away from these pipelines. The air inlet of the equipment room must be away from such pollution sources.
- Use environmentally friendly materials to decorate the equipment room. Avoid using organic materials that contains harmful gases, such as sulfur or chlorine-containing insulation cottons, rubber mats, sound-proof cottons, and avoid using plasterboards with high sulfur concentration.
- Place fuel (diesel or gasoline) engines separately. Do not place them in the same equipment room with the device. Make sure the exhausted air of the engines will not flow into the equipment room or towards the air inlet of the air conditioners.
- Place batteries separately. Do not place them in the same room with the device.
- Employ a professional company to monitor and control corrosive gases in the equipment room regularly.

Examining the installation site

Before you install the switch, verify that the installation site meets the installation requirements. The switch can operate correctly in an A1 or A2 installation site. Availability issues might occur if you install the switch in an A3, B1, B2, or C installation site.

Table 5 Installation sites

Category	Definition	Example
A1: indoor controlled environment	• Indoor environments where temperature and humidity are controlled. • Completely enclosed or shielded indoor environments.	Central equipment rooms, IDC equipment rooms, mobile cabins with air conditioners, outdoor air conditioner cabinets, and heat exchanger cabinets.
A2: indoor partially controlled environment	• Indoor environments where temperature and humidity are partially controlled. • Incompletely enclosed or shielded places. • Places far from pollution sources.	Simple equipment rooms, ordinary houses, garages, corridors, and direct ventilation cabinets far from pollution sources, houses without direct exposure to sunlight or rain, railway station platforms, and stadiums.
A3: indoor uncontrolled environment	• Indoor environments where temperature and humidity are uncontrolled. • Incompletely enclosed or shielded places. • Places near pollution sources.	Simple equipment rooms, ordinary houses, garages, corridors, and direct ventilation cabinets near pollution sources, houses without direct exposure to sunlight or rain, railway station platforms, stadiums, uncleaned rooms after decoration, and rooms under decoration.
B1: outdoor general environment	• Unshielded places where the temperature and humidity are not controlled. • Places far from pollution sources.	Completely exposed outdoor places far from pollution sources.

Category	Definition	Example
B2: harsh environment	• Unshielded places where the temperature and humidity are not controlled. • Sea environments or outdoor land environments near pollution sources.	Islands, ships, and completely exposed outdoor places near pollution sources.
C: special environments	Special application environments	Buried, underwater, or undersea environments and manholes.

Table 6 Pollution sources

Category	Radius range
Saline water areas such as oceans and saline lakes	≤ 3.7 km (2.30 miles)
Serious pollution sources such as metallurgic plants, coal mines, and heat and power plants	≤ 3 km (1.86 miles)
Medium pollution sources such as chemical factories, rubber plants, and electroplating factories	≤ 2 km (1.24 miles)
Light pollution sources, such as food factories, tanneries, and heating boilers	≤ 1 km (0.62 miles)

Checking power distribution or power supply environment

Table 7 Requirements for power distribution or power supply environment

Item	Requirements
Preparation	The power supply must be available before you install the switch.
Voltage	The voltage provided to the switch must be within the operating voltage range. For the operating voltage range, see *H3C S5170-EI & S5570S-EI Switch Series Hardware Information and Specifications*.
Power receptacle and cables	• If the external power supply system provides an AC power outlet, prepare a country-specific AC power cord yourself. Make sure the PE wire of the AC power supply is grounded reliably. • If the external power supply system provides a DC distribution box, prepare DC power cords yourself. • Do not use the power cord provided with the switch on other devices.

Laser safety

⚠ **WARNING!**

The switch is Class 1 laser device. Disconnected optical fibers or transceiver modules might emit invisible laser light. Do not stare into beams or view directly with optical instruments when the switch is operating.

Installation tools

No installation tools are provided with the switch. Prepare the following tools yourself as required:

- ESD wrist strap
- Flat-blade screwdriver
- Phillips screwdriver
- Needle-nose pliers
- Marker

Installation accessories

Before installation, make sure you have all the required installation accessories. If an installation accessory is damaged or lost, purchase a new one by using the BOM code in Table 8.

Table 8 Installation accessories

Code	Description	Quantity	Applicable device models
N/A	Front mounting kit, including a pair of front mounting brackets and eight M4 screws	1 pair, provided	All models
N/A	Rear mounting bracket kit, including a pair of rear mounting brackets and two shoulder screws	1 pair, provided	S5570S-28S-HPWR-EI S5570S-54S-PWR-EI S5570S-30MS-UPWR-EI
N/A	M6 screw and cage nut	User supplied	All models
N/A	Rubber feet	Four, provided	All models
N/A	Grounding cable 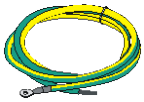	1, provided	All models
N/A	Grounding screw	1, provided	All models
N/A	Power module filler panel	1, provided	S5570S-28S-EI S5570S-54S-EI S5570S-36F-EI

Code	Description	Quantity	Applicable device models
			S5570S-54F-EI
N/A	Power module filler panel 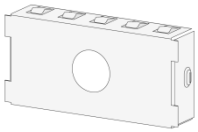	1, provided	S5570S-28S-HPWR-EI S5570S-54S-PWR-EI S5570S-30MS-UPWR-EI
N/A	Power module filler panel 	1, provided	S5570S-28S-HPWR-EI-A S5570S-54S-PWR-EI-A
N/A	AC power cord The appearance and parameters for AC power cords vary depending on countries and regions. The AC power cord in this table is a standard AC power cord in China.	1, provided for the switch with a built-in power supply 1, provided with removable power supplies	All models
N/A	DC power cord 	1, provided with DC power supplies	S5570S-EI series
N/A	AC power cord bail latch 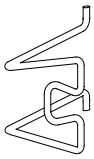 The appearance of the bail latch might differ.	1, provided with the CA-70A12 and PSR75-12A power supplies	S5570S-28S-EI S5570S-54S-EI S5570S-36F-EI S5570S-54F-EI
04042967	DB9-to-RJ45 console cable 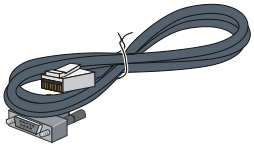	1, optional	All models
0404A1EE	USB-to-RJ45 console cable	1, optional	All models

Code	Description	Quantity	Applicable device models
N/A	Releasable cable tie 	1, provided with the PSR180-56A, PSR360-56A, PSR720-56A, PSR1110-56A, PSR600-54A-B, PSR920-54A-B, and PSR1600-54A-B power supplies	S5570S-28S-HPWR-EI S5570S-54S-PWR-EI S5570S-28S-HPWR-EI-A S5570S-54S-PWR-EI-A S5570S-30MS-UPWR-EI

Installing the switch

CAUTION:

Keep the tamper-proof seal on a mounting screw on the chassis cover intact, and if you want to open the chassis, contact H3C for permission. Otherwise, H3C shall not be liable for any consequence.

Figure 1 Hardware installation flow

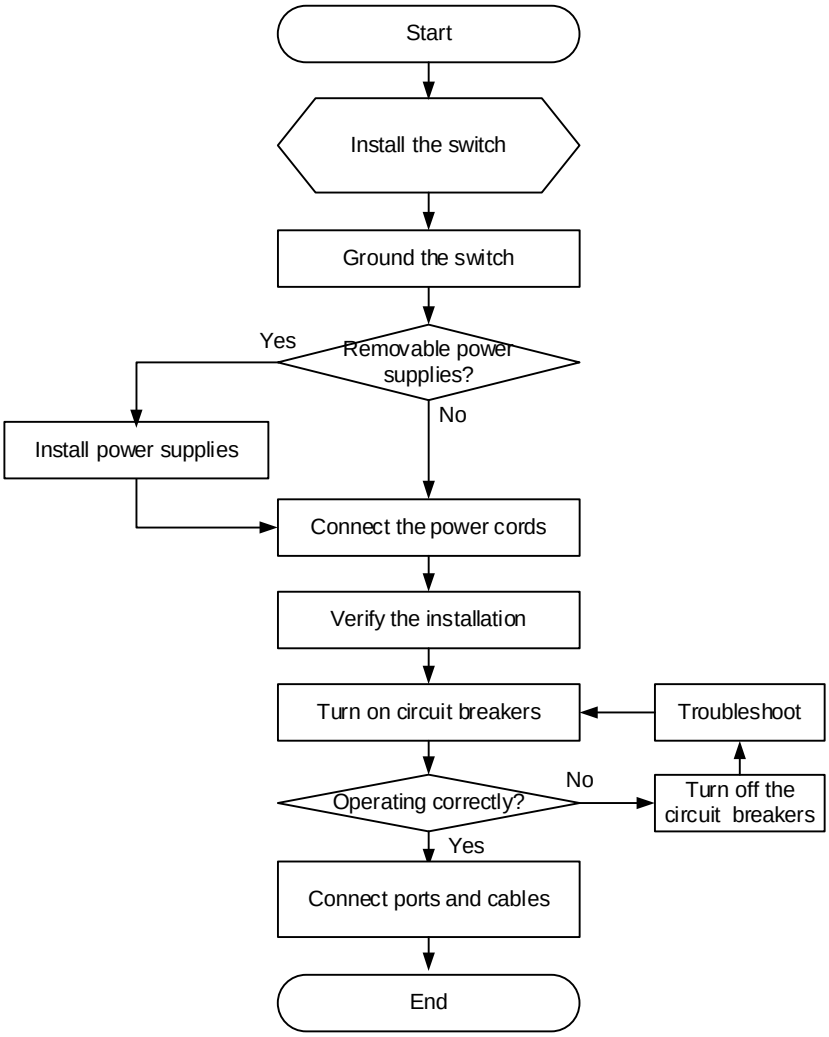

Installing the switch in a 19-inch rack

Installation methods

Table 9 Installation methods

Applicable switch models	Installation method	Requirements and guidelines	Installation procedure
S5170-28S-EI S5170-54S-EI S5170-54S-EI-DP S5170-28S-HPWR-EI S5170-54S-PWR-EI S5170-36F-EI S5170-36F-EI-DP S5570S-28S-EI S5570S-54S-EI S5570S-36F-EI S5570S-54F-EI S5570S-28S-HPWR-EI-A S5570S-54S-PWR-EI-A	Using front mounting brackets	Select an installation position for the front mounting brackets as required: near the power supply side or port side. For the S5170-28S-EI, S5170-54S-EI, S5170-36F-EI, and S5170-36F-EI-DP switches, the front mounting brackets can be installed only near the port side.	See "Rack-mounting the switch by using front mounting brackets."

S5570S-28S-HPWR-EI
S5570S-54S-PWR-EI
S5570S-30MS-UPWR-EI
	Using front and rear mounting brackets	• Select an installation position for the front mounting brackets as required: near the power supply side or port side.
		• Install the rear mounting brackets based on the rack depth (distance between the front and rear rack posts).
		  ○ If the rack depth is in the range of 429 to 595 mm (16.89 to 23.43 in), orient the rear mounting brackets with the wide flange inside the rack.
		  ○ If the rack depth is in the range of 274 to 440 mm (10.79 to 17.32 in) and the distance from the rear rack posts to the inner surface of the cabinet door is greater than 153 mm (6.02 in), orient the rear mounting brackets with the wide flange outside the rack.
		• If you are to install a PSR1110-56A power supply, make sure the rack depth is larger than 600 mm (23.62 in)
			See "Rack-mounting the switch by using front and rear mounting brackets."

IMPORTANT:

For the rack doors to close easily after switch installation, make sure the distance requirements described in Table 9 are met.

Installation procedure at a glance

Figure 2 Procedure for installing the switch in a 19-inch rack by using front mounting brackets

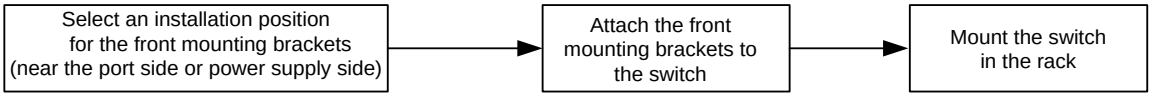

Figure 3 Procedure for installing the switch in a 19-inch rack by using front and rear mounting brackets

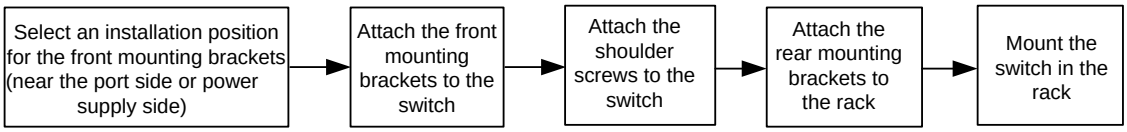

NOTE:

If a rack shelf is available, you can put the switch on the rack shelf, slide the switch to an appropriate location, and attach the switch to the rack by using the mounting brackets.

Rack-mounting the switch by using front mounting brackets

The installation procedures are the same for the S5170-EI series and S5570S-EI series except for the S5570S-28S-HPWR-EI, S5570S-54S-PWR-EI, and S5570S-30MS-UPWR-EI. The following uses the S5570S-54F-EI as an example.

Attaching the front mounting brackets to the switch

For the S5170-28S-EI, S5170-54S-EI, S5170-36F-EI, and S5170-36F-EI-DP switches, you can install front mounting brackets only at the port side.

The switch has one mounting position near the network ports and the other mounting position near the power supplies for the front mounting brackets. Select one position as needed.

To attach the front mounting brackets to the chassis:

1. Place the wide flange of the mounting bracket against the chassis side panel. Align the mounting bracket installation holes with the screw holes in the chassis.
   - To install the mounting brackets at the port-side mounting position, see Figure 4.
   - To install the mounting brackets at the power supply-side mounting position, see Figure 5.
2. Fasten the M4 screws to secure the mounting bracket to the switch. As a best practice, use a torque of 12 kgf-cm (1.18 Nm) to fasten the M4 screws.
3. Attach the front mounting bracket to the other side of the chassis in the same way.

Figure 4 Attaching the front mounting brackets to the port-side mounting position

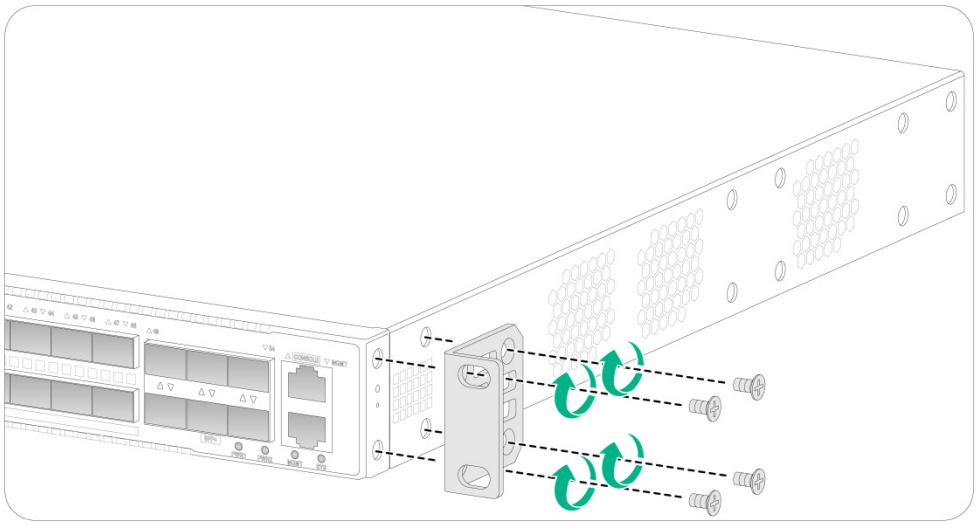

Figure 5 Attaching the front mounting brackets to the power supply-side mounting position

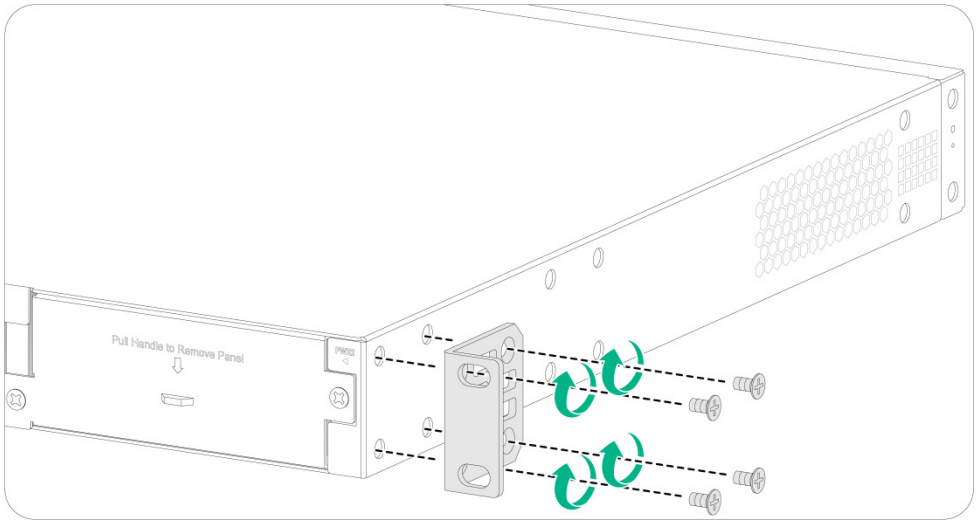

Mounting the switch in the rack

This task requires two people.

To mount the switch in the rack:

1. Wear an ESD wrist strap and make sure it makes good skin contact and is reliably grounded.
2. Verify that the front mounting brackets have been securely attached to the switch chassis. See "Attaching the front mounting brackets to the switch."
3. Attach cage nuts to the front rack posts.
4. One person supports the bottom of the switch, and moves the switch to an appropriate position based on the installation positions of the front mounting brackets.
5. Another person uses user supplied M6 screws and cage nuts to attach the mounting brackets to the rack and verifies that the brackets are level and secure. As a best practice, use a torque of 30 kgf-cm (2.94 Nm) to fasten the M6 screws.

Figure 6 Mounting the switch in the rack (port-side mounting position for the front mounting brackets)

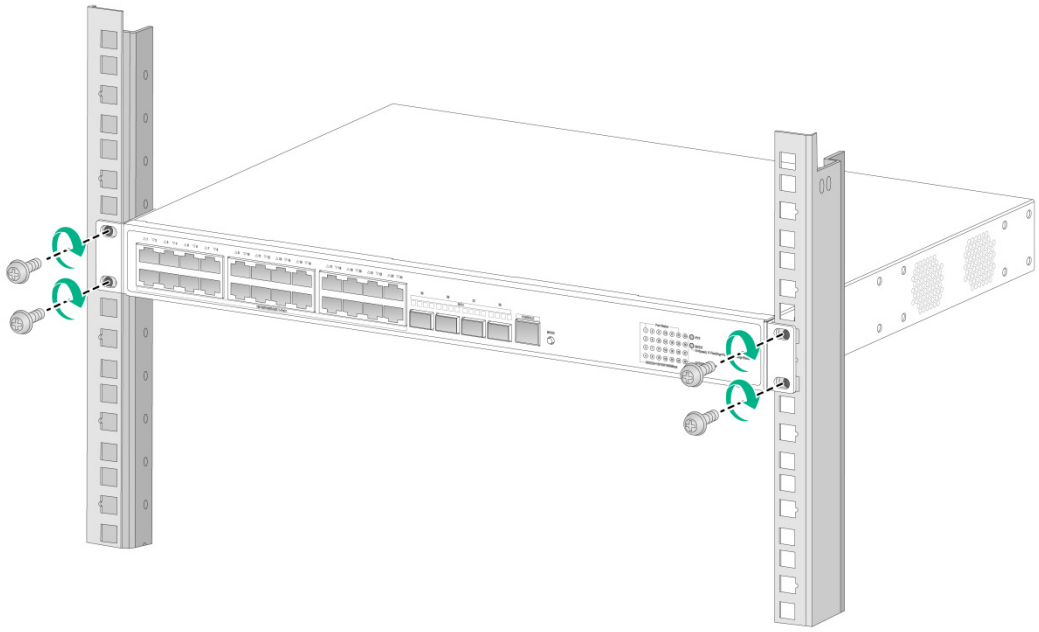

Figure 7 Mounting the switch in the rack (power supply-side mounting position for the front mounting brackets)

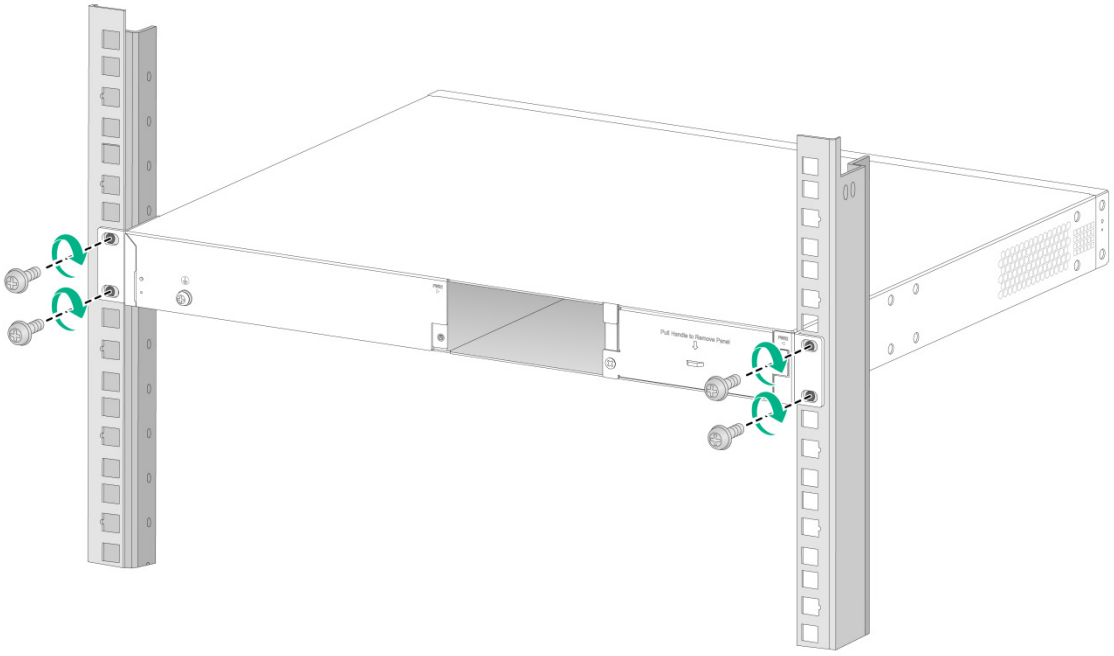

Rack-mounting the switch by using front and rear mounting brackets

The installation procedures are the same for the S5570S-28S-HPWR-EI, S5570S-54S-PWR-EI, and 5570S-30MS-UPWR-EI. The following uses the S5570-28S-HPWR-EI as an example.

Attaching the front mounting brackets and shoulder screws to the switch

The switch provides two installation positions on its side for the front mounting brackets. One is near the power supply side and one is near the port side. The following procedure attaches the front mounting brackets to the installation position near the port side. The power supply-side mounting is similar.

To attach the front mounting brackets and shoulder screws to the switch:

1. Wear an ESD wrist strap. Make sure the strap makes good skin contact and is reliably grounded.
2. Align the round holes in the wide flange of one front mounting bracket with the screw holes in the chassis. See Figure 8.
3. Use M4 screws (supplied with the switch) to attach the mounting bracket to the chassis. As a best practice, use a torque of 12 kgf-cm (1.18 Nm) to fasten the M4 screws.
4. Repeat the preceding two steps to attach the other mounting bracket to the chassis.
5. Unpack the shoulder screws and attach them to the chassis. As a best practice, use a torque of 12 kgf-cm (1.18 Nm) to fasten the shoulder screws.

   Two installation positions as red-marked in Figure 8 are available for shoulder screws. Select one as required.

Figure 8 Attaching the front mounting brackets and shoulder screws to the chassis

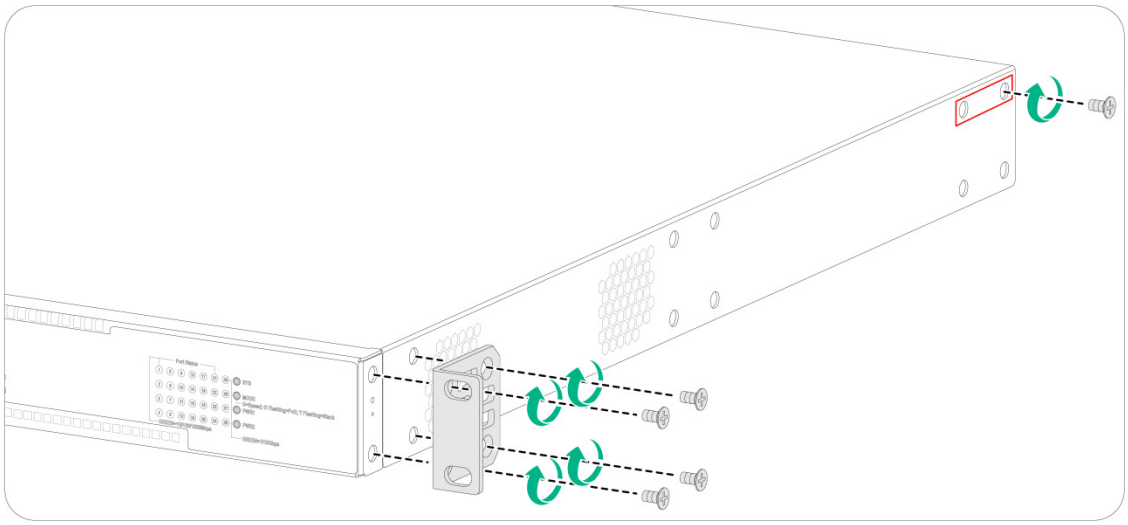

Attaching the rear mounting brackets to the rack

1. Determine the switch installation position in the rack.
2. Install cage nuts (user-supplied) in the rear rack posts. Make sure the corresponding cage nuts on the left and right rear rack posts are at the same height.
3. Orient the rear mounting brackets with the wide flange inside or outside the rack as required.
4. Use M6 screws (user-supplied) to attach the rear mounting brackets to the rear posts, as shown in Figure 9. As a best practice, use a torque of 30 kgf-cm (2.94 Nm) to fasten the M6 screws.

   Do not fully tighten the M6 screws before mounting the switch in the rack.

Figure 9 Attaching the rear mounting brackets to the rack with the wide flange inside the rack

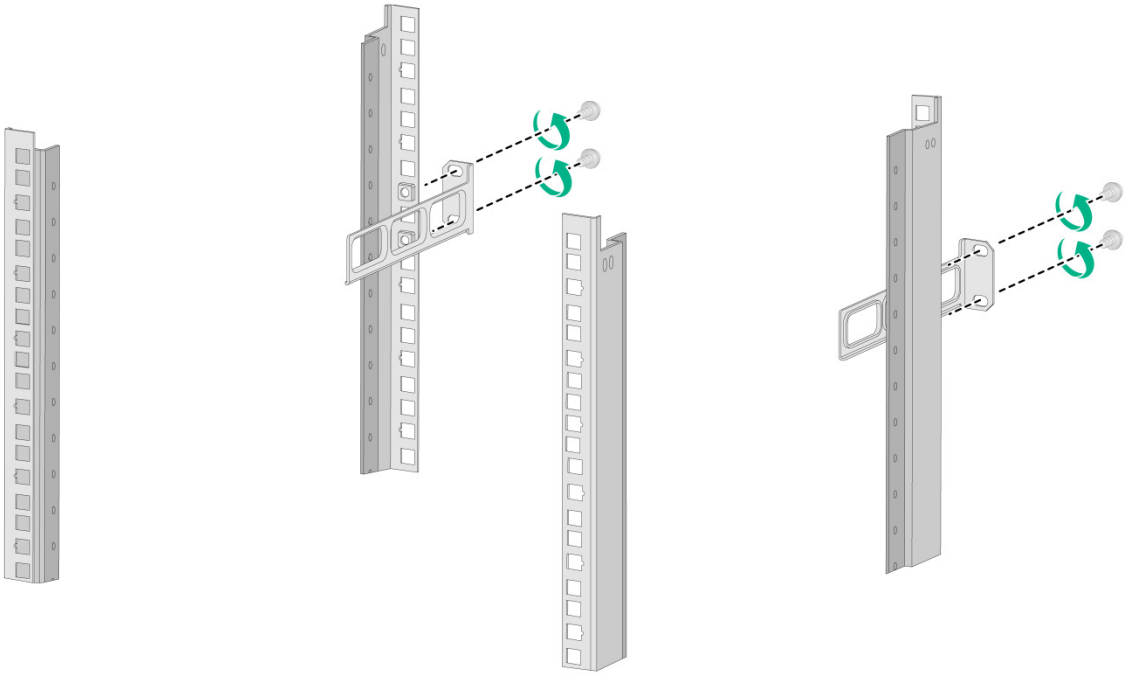

Figure 10 Attaching the rear mounting brackets to the rack with the wide flange outside the rack

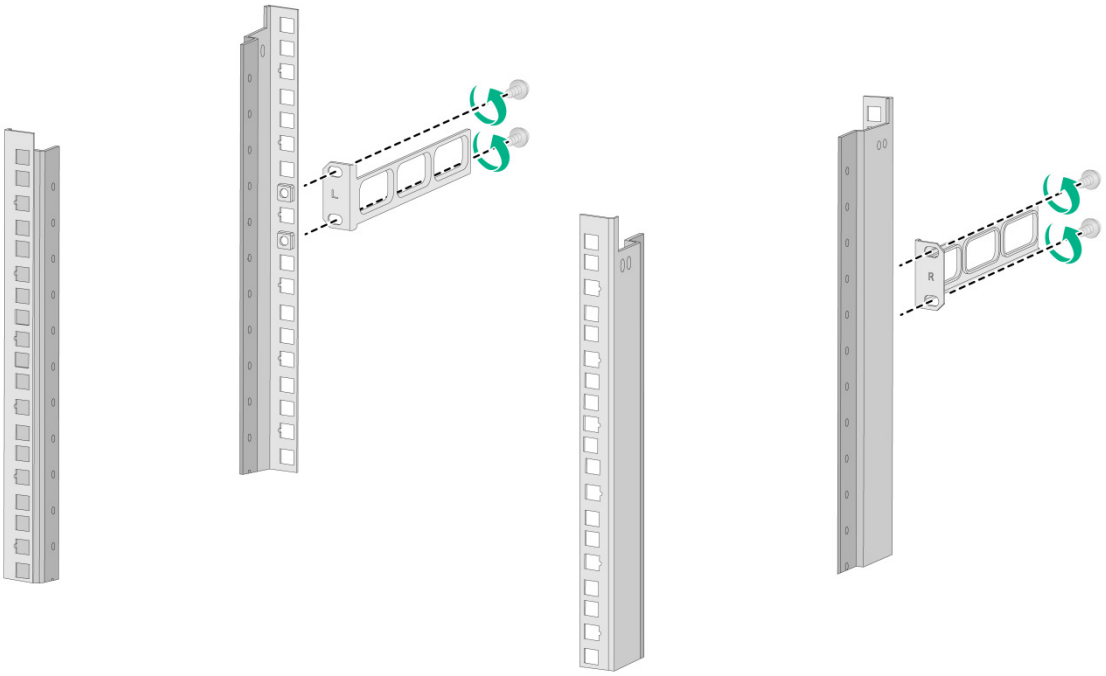

Mounting the switch in the rack

1. Wear an ESD wrist strap. Make sure the strap makes good skin contact and is reliably grounded.

2. Make sure the front mounting brackets and shoulder screws are securely attached to the two sides of the switch.
3. Attach cage nuts to the front rack posts. Make sure the corresponding cage nuts on the left and right front rack posts are at the same height.
4. One person supports the chassis bottom with one hand, holds the front part of the chassis with the other, and pushes the chassis into the rack gently. Make sure the shoulder screws rest firmly on the upper edge of the rear mounting brackets. See Figure 11 and Figure 12.
5. The other person attaches the front mounting brackets by using M6 screws and cage nuts to the front rack posts. Make sure the switch is installed securely in the rack. See Figure 11 and Figure 12. As a best practice, use a torque of 30 kgf-cm (2.94 Nm) to fasten the M6 screws.

Figure 11 Mounting the switch in the rack (with the wide flange of the rear mounting brackets inside the rack)

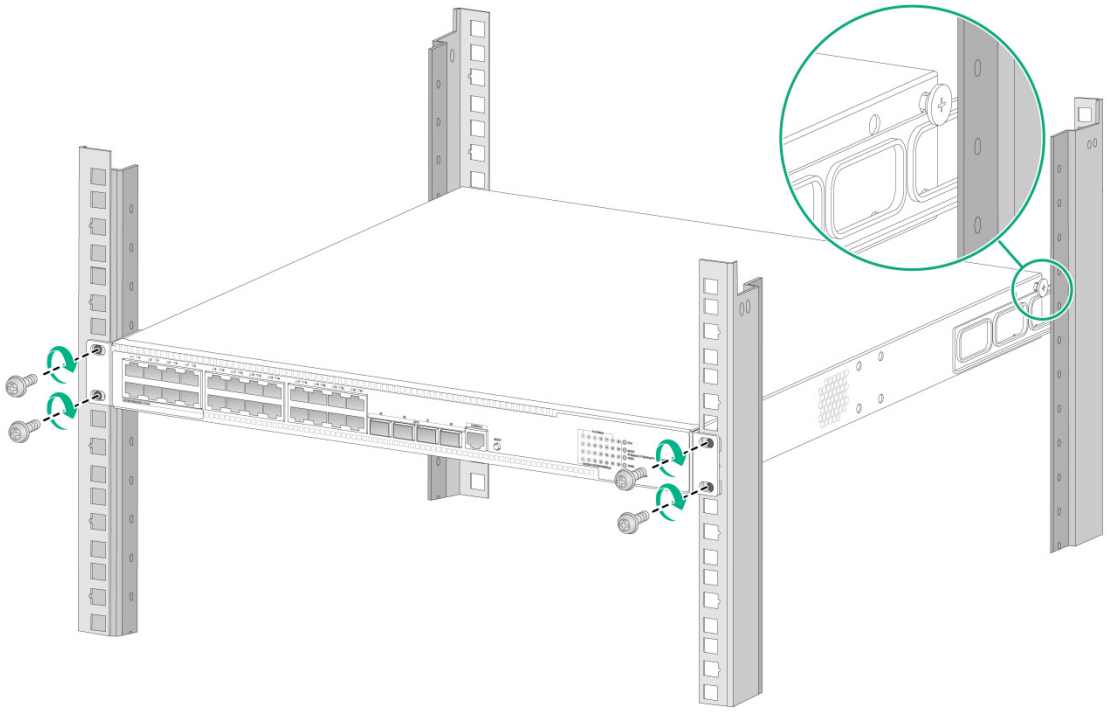

Figure 12 Mounting the switch in the rack (with the wide flange of the rear mounting brackets outside the rack)

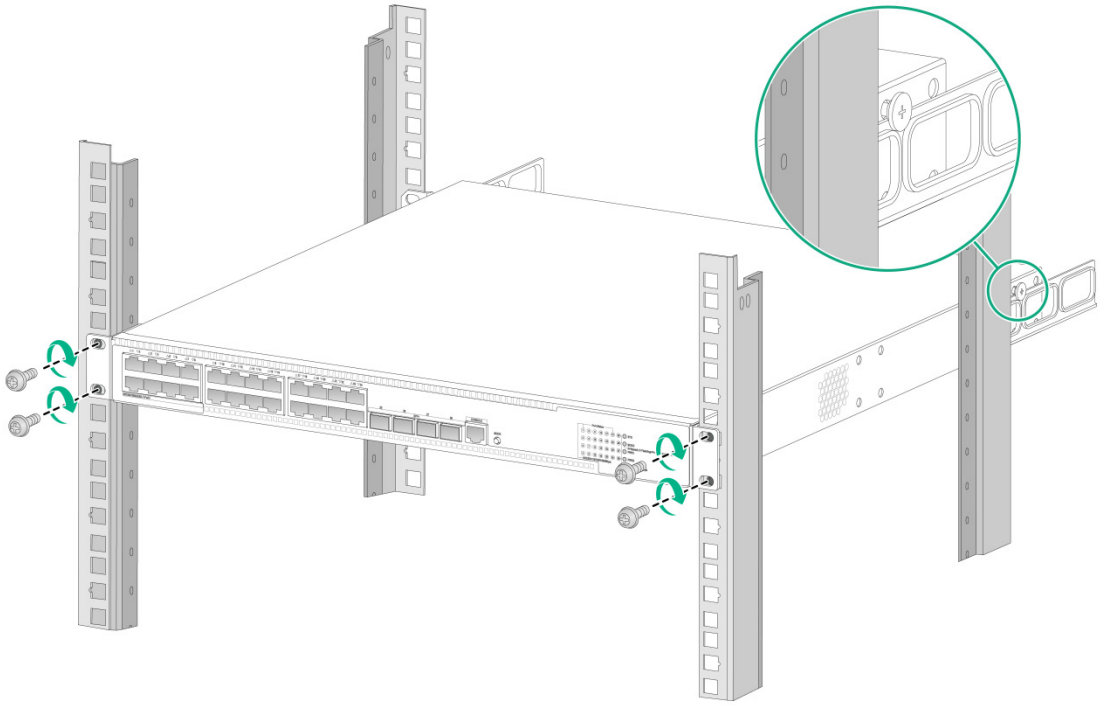

Mounting the switch on a workbench

IMPORTANT:

- Reserve a minimum clearance of 10 cm (3.9 in) around the chassis for heat dissipation.
- Do not place heavy objects on the switch.

To mount the switch on a workbench:

1. Verify that the workbench is sturdy and reliably grounded.
2. Place the switch with bottom up, and clean the round holes in the chassis bottom with dry cloth.
3. Attach the rubber feet to the four round holes in the chassis bottom.
4. Place the switch with upside up on the workbench.

Grounding the switch

WARNING!

- Correctly connecting the grounding cable is crucial to lightning protection and ESD and EMI protection. You must connect the grounding cable correctly and reliably for the switch.
- For information about lightning protection for the switch, see *H3C Network Devices Lightning Protection Guide*.

The power input end of the switch has a noise filter, whose central ground is directly connected to the chassis to form the chassis ground (commonly known as PGND). You must securely connect this

chassis ground to the earth to minimize the potential for system damage, maximize the safety at the site, and minimize EMI susceptibility of the system.

Select a grounding method based on the installation environment.

NOTE:

The power and grounding terminals in this section are for illustration only.

Grounding the switch by using a grounding strip

CAUTION:

- Connect the grounding cable to the grounding strip in the equipment room. Do not connect it to a fire main or lightning rod.
- To guarantee the grounding effect and avoid switch damage, use the grounding cable provided with the switch to connect the switch to a grounding strip in the equipment room.

If a grounding strip is available at the installation site, use the grounding cable provided with the switch to connect the switch to the grounding strip.

Connecting the grounding cable to the chassis

1. Remove the grounding screw from the grounding hole in the chassis.
2. Use the grounding screw to attach the ring terminal of the grounding cable to the grounding screw hole. Fasten the screw. As a best practice, use a torque of 5 kgf-cm (0.49 Nm) to fasten the grounding screw.

IMPORTANT:

Orient the grounding cable as shown in Figure 13 so that you can easily install or remove the removable components.

Figure 13 Connecting the grounding cable to the chassis

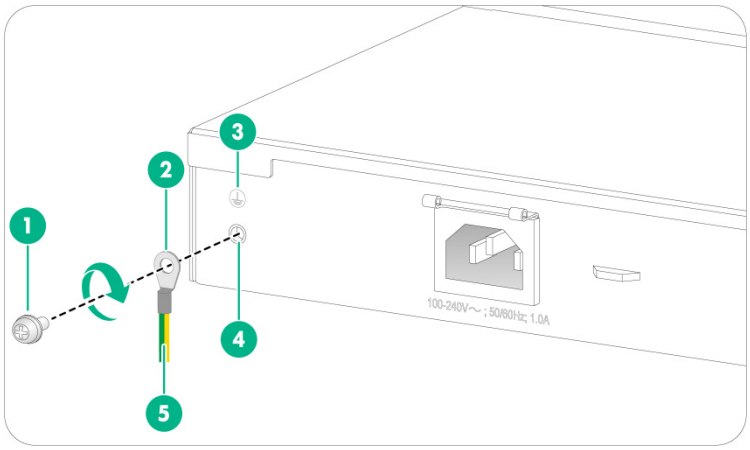

(1) Grounding screw	(2) Ring terminal
(3) Grounding sign	(4) Grounding hole
(5) Grounding cable	

Connecting the grounding cable to a grounding strip

1. Use needle-nose pliers to bend the bare metal part to the shape as shown in Figure 14. Make sure the bended part can securely attached to the grounding post on the grounding strip.

2. Attach the bended part of the grounding cable to the grounding post and use the hex nut to fasten the bended part to the post.

Figure 14 Connecting the grounding cable to a grounding strip

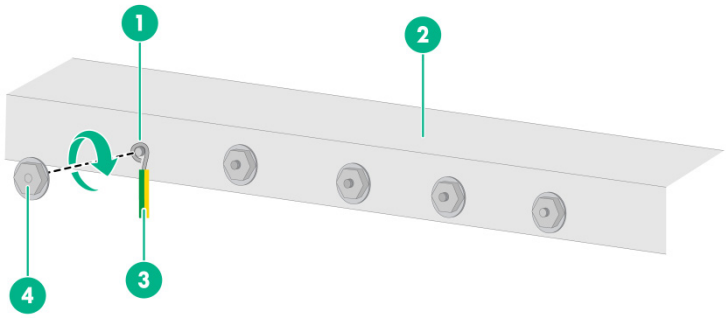

(1) Grounding post	(2) Grounding strip
(3) Grounding cable	(4) Hex nut

Grounding the switch by using a grounding conductor buried in the earth ground

If the installation site does not have grounding strips, but earth ground is available, hammer a 0.5 m (1.64 ft) or longer angle iron or steel tube into the earth ground to act as a grounding conductor.

The dimensions of the angle iron must be a minimum of 50 × 50 × 5 mm (1.97 × 1.97 × 0.20 in). The steel tube must be zinc-coated and its wall thickness must be at least 3.5 mm (0.14 in).

Weld the yellow-green grounding cable to the angel iron or steel tube and treat the joint for corrosion protection.

Figure 15 Grounding the switch by burying the grounding conductor into the earth ground

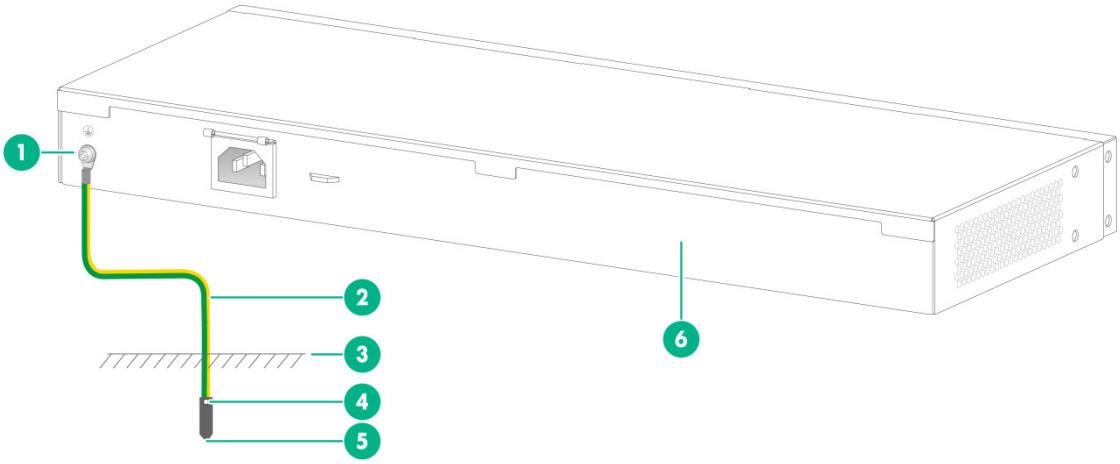

(1) Grounding screw	(2) Grounding cable	(3) Earth
(4) Welding point	(5) Grounding conductor	(6) Chassis rear panel

Verifying the connection after grounding the switch

- If you ground the switch by using a grounding strip, perform the following tasks:

a. Use a multimeter to measure the resistance between the switch grounding terminal and grounding point, and make sure the resistance is less than 0.1Ω.
b. Use a grounding resistance tester to measure the grounding resistance of the grounding strip, and make sure the grounding resistance is less than 1Ω.

- If you ground the switch by using a grounding conductor buried in the earth ground, perform the following tasks:
  a. Use a multimeter to measure the resistance between the switch grounding terminal and grounding point, and make sure the resistance is less than 0.1Ω.
  b. Use a grounding resistance tester to measure the grounding resistance of the angle iron in the ground, and make sure the grounding resistance is less than 10Ω. For locations with high soil resistivity, sprinkle some resistance reducer to reduce soil resistivity or replace soil around the grounding strip with soil with lower resistance.

For information about resistance measurement, see *H3C Network Devices Lightning Protection Guide*.

Installing and removing a power supply

Table 10 Power supply installation method

Power supply model	Installation method
CA-70A12 PSR75-12A PSR150-D1	See "Installing/removing a power supply (1)."
PSR180-56A PSR360-56A PSR560-56D PSR720-56A PSR1110-56A PSR600-54A-B PSR920-54A-B PSR1600-54A-B	See "Installing/removing a power supply (2)."

The S5570S-EI switch series provides two power supply slots. You can install one or two power supplies for the switch as required. For the power supplies available for the switch and their specifications, see *H3C S5170-EI & S5570S-EI Switch Series Hardware Information and Specifications*.

The S5570S-28S-EI (LS-5570S-28S-EI), S5570S-54S-EI (LS-5570S-54S-EI), S5570S-36F-EI-GL (LS-5570S-36F-EI), S5570S-54F-EI (LS-5570S-54F-EI), S5570S-28S-HPWR-EI-A (LS-5570S-28S-HPWR-EI-A), and S5570S-54S-PWR-EI-A (LS-5570S-54S-PWR-EI-A) switches are shipped with power supply slot PWR1 empty and power supply slot PWR2 installed with a filler panel.

The S5570S-28S-EI (LS-5570S-28S-EI-GL), S5570S-54S-EI (LS-5570S-54S-EI-GL), S5570S-36F-EI-GL (LS-5570S-36F-EI-GL), S5570S-54F-EI (LS-5570S-54F-EI-GL), S5570S-28S-HPWR-EI-A (LS-5570S-28S-HPWR-EI-A-GL), and S5570S-54S-PWR-EI-A (LS-5570S-54S-PWR-EI-A-GL) switches support shipment with power supplies installed. If you hope that the switch is shipped with the purchased power supplies installed, contact the H3C sales personnel.

WARNING!

- To avoid bodily injury or switch damage, strictly follow the procedures in Figure 16 and Figure 17 to install and remove a power supply.
- You must provide a circuit breaker for each power supply.

Figure 16 Installation procedure

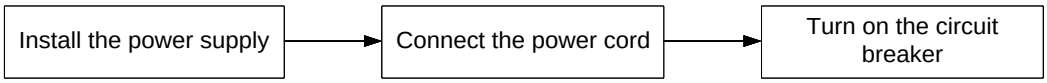

Figure 17 Removal procedure

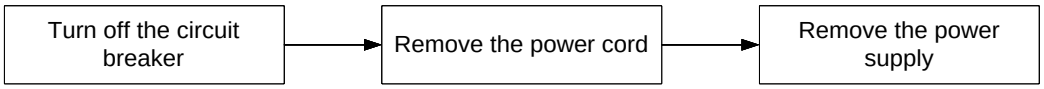

CAUTION:

- To prevent damage to the power supply and the connectors on the backplane, insert the power supply gently. If you encounter a hard resistance when inserting the power supply, pull out the power supply and insert it again. Make sure the power supply has a good contact with the connectors.
- When the switch has two power supplies working in 1+1 redundancy, removing one power supply does not affect system operation. If the switch has only one power supply, removing the power supply causes power down of the switch.
- If you are not to install a new power supply after removing the old one, install a filler panel in the slot in time.
- Use a torque of 5 kgf-cm (0.49 Nm) to fasten the captive screws on a power supply.

Installing/removing a power supply (1)

This section applies to the CA-70A12, PSR75-12A, and PSR150-D1 power supplies, which use a similar installation/removal procedure. A PSR75-12A power supply is used as an example.

Installing a power supply

1. Wear an ESD wrist strap and make sure it makes good skin contact and is reliably grounded.
2. Remove the filler panel from the target power supply slot as follows:
   a. Remove the screws from the filler panel.
   b. Use a flathead screwdriver to remove the filler panel.

Figure 18 Removing the filler panel

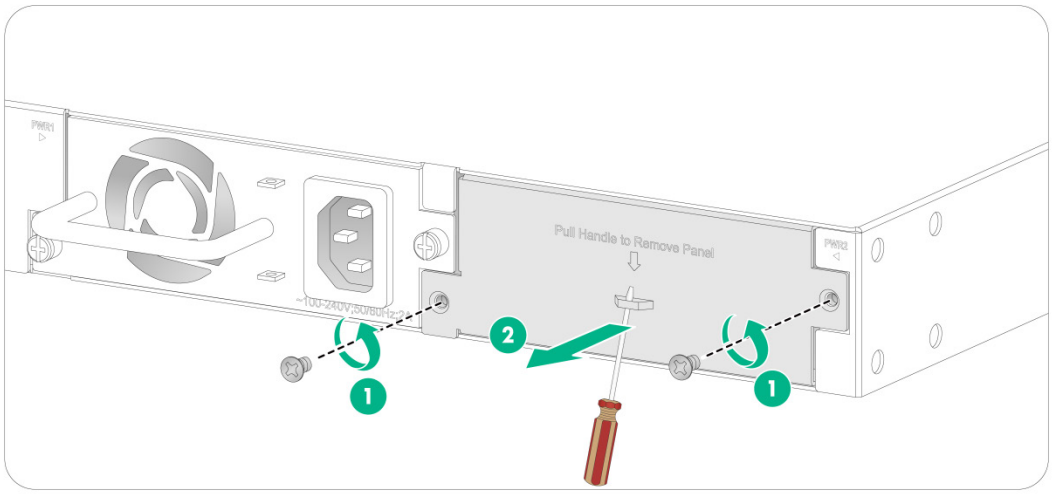

3. Unpack the power supply and verify that the power supply model is correct.
4. Correctly orient the power supply with the power supply slot (use the letters on the power supply faceplate for orientation), grasp the handle of the power supply with one hand and support its bottom with the other, and slide the power supply slowly along the guide rails into the slot (see callout 1 in Figure 19).
5. Fasten the captive screws on the power supply with a Phillips screwdriver to secure the power supply in the chassis (see callout 2 in Figure 19). If the captive screw cannot be tightly fastened, verify the installation of the power supply.

   As a best practice, use a torque of 5 kgf-cm (0.49 Nm) to fasten the captive screws.
6. Install the filler panel over the empty power supply slot to prevent dust and ensure good ventilation if you install only one power supply.

Figure 19 Installing a power supply

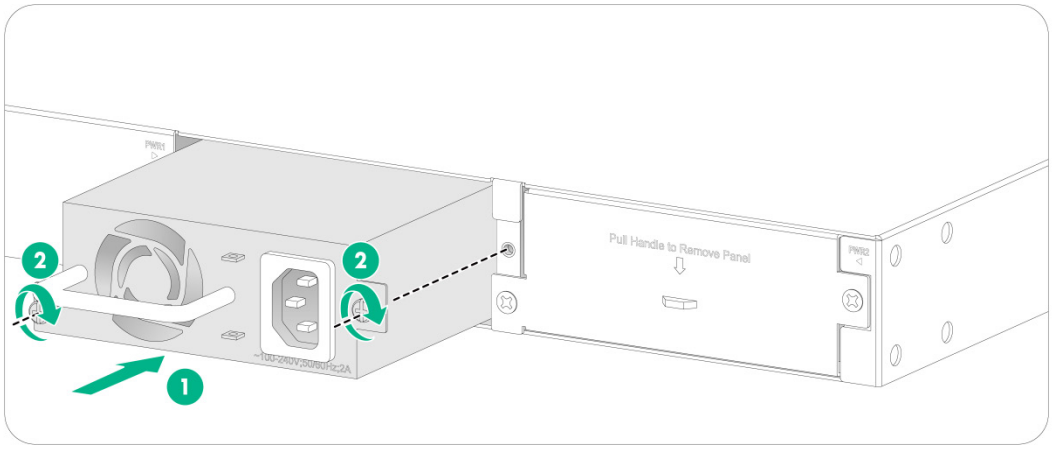

Removing a power supply

1. Wear an ESD wrist strap and make sure it makes good skin contact and is reliably grounded.
2. Disconnect the power cord.
3. Loosen the captive screws on the power supply with a Phillips screwdriver until they are completely disengaged.
4. Grasp the handle of the power supply with one hand and pull it out a little, support the bottom with the other hand, and pull the power supply slowly along the guide rails out of the slot.

Put away the removed power supply in an antistatic bag or the power supply package bag for future use.

Figure 20 Removing a power supply

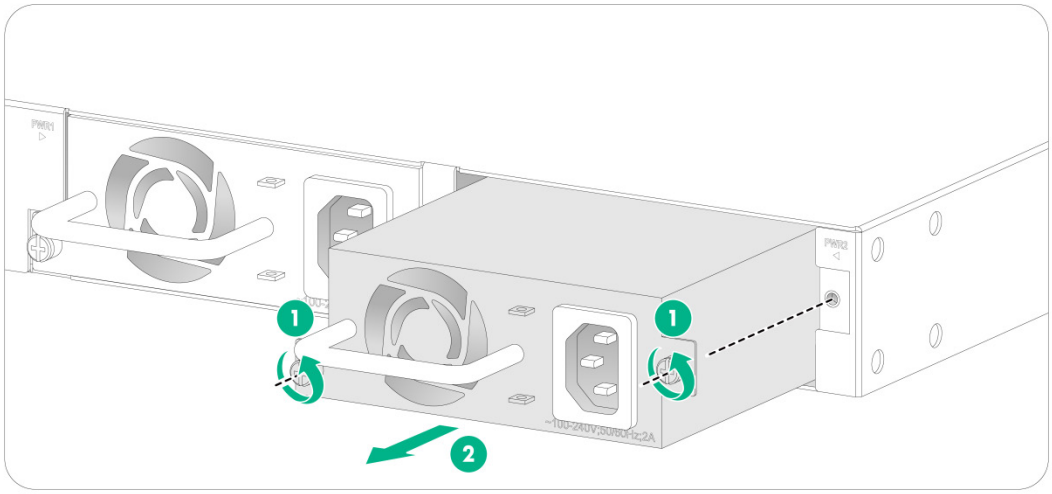

Installing/removing a power supply (2)

This section applies to the PSR180-56A, PSR360-56A, PSR560-56D, PSR720-56A, PSR1110-56A, PSR600-54A-B, PSR920-54A-B, and PSR1600-54A-B power supplies, which use a similar installation/removal procedure. A PSR360-56A power supply is used as an example.

Installing a power supply

1. Wear an ESD wrist strap. Make sure the strap makes good skin contact and is reliably grounded.
2. Remove the filler panel, if any, from the target power supply slot.

   Put your forefinger into the hole in the filler panel and then pull the filler panel out of the slot gently.

   Keep the removed filler panel secure for future use.

   Figure 21 Removing the filler panel from the target power supply slot

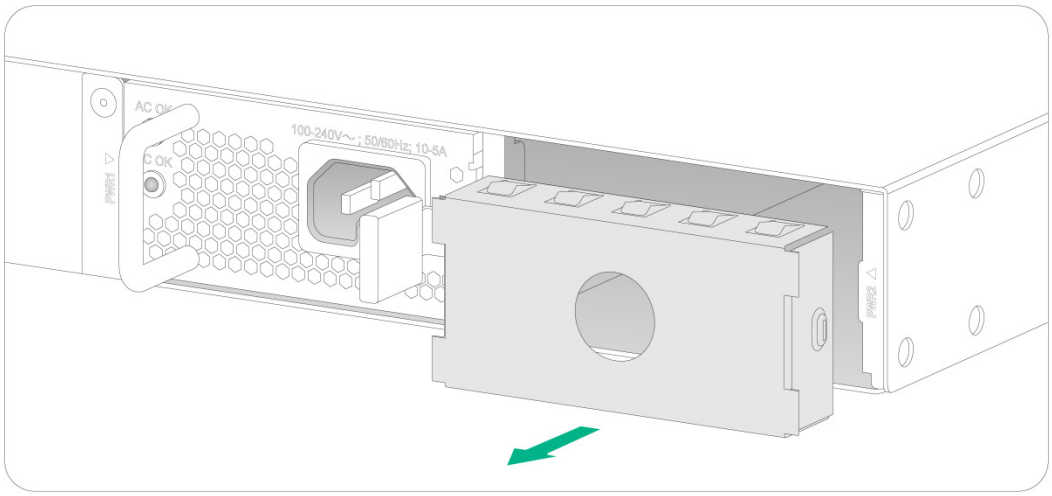

3. Unpack the power supply. Make sure the power supply model is as required.

Keep the packaging box and packaging bag for the power supply secure for future use.

4. Correctly orient the power supply. Make sure the lettering on the power supply is upward.
5. Align the power supply with the power supply slot. Grasping the handle of the power supply with one hand and supporting its bottom with the other, slide the power supply slowly into the slot along the guide rails until the latch of the power supply clicks into the slot.

   To prevent damage to the power supply or the connectors on the backplane, insert the power supply gently. If you encounter a hard resistance when inserting the power supply, pull out the power supply and insert it again.

Figure 22 Installing a power supply

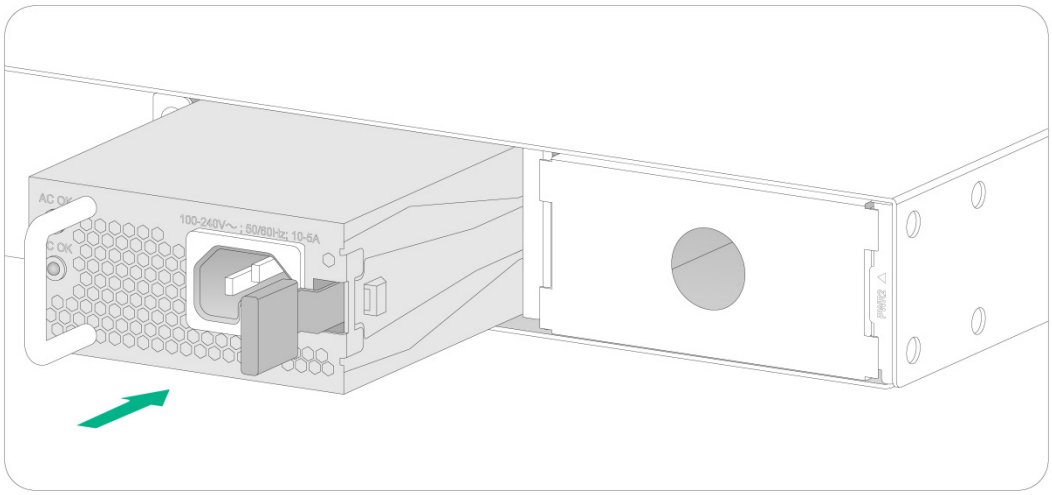

Figure 23 Installation completed

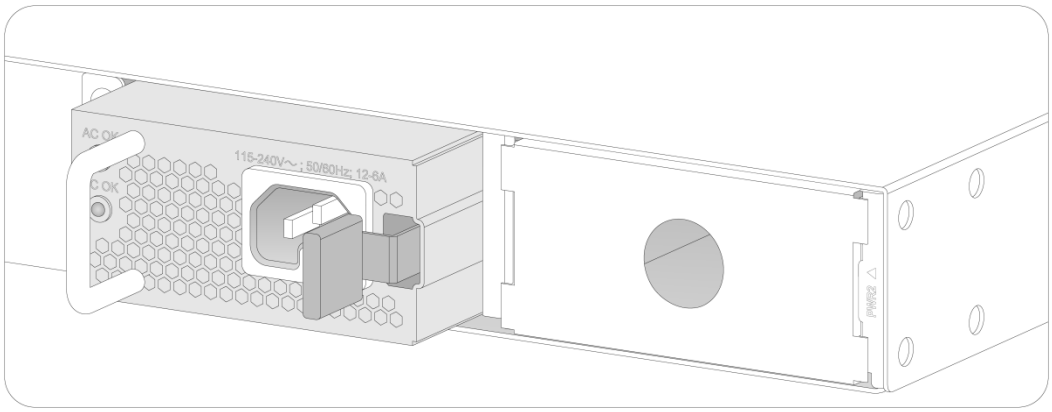

NOTE:

The PSR1110-56A power supply, including its handle, adds 64 mm (2.52 in) to chassis depth.

Removing a power supply

1. Wear an ESD wrist strap and make sure it makes good skin contact and is reliably grounded.
2. Disconnect the power cord.
3. Press the latch towards the handle, and pull the power supply along the guide rails until it is part-way out.
4. Grasp the handle of the power supply with one hand, support the bottom with the other hand, and pull the power supply slowly along the guide rails out of the slot.

Keep the removed power supply in an antistatic bag or the power supply package bag for future use.

5. Install the filler panel to prevent dust and ensure good ventilation if no power supply is installed in the slot.

Figure 24 Removing the power supply

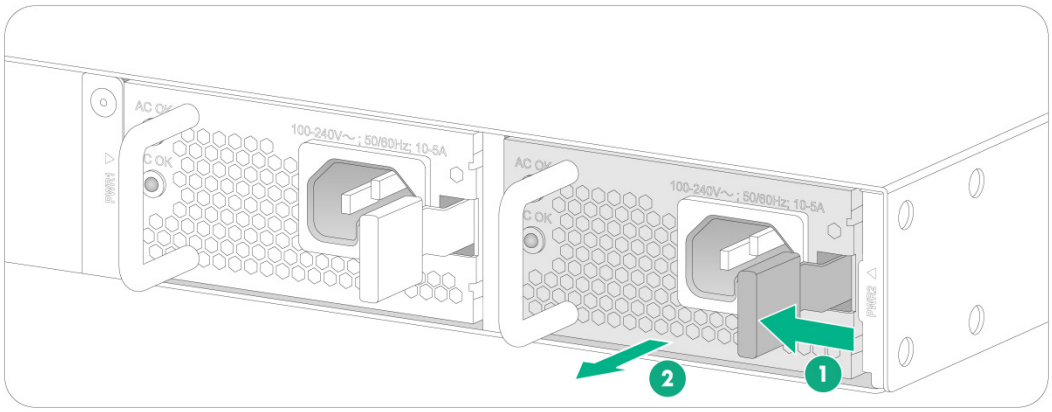

Connecting the power cord

CAUTION:

- CA-70A12 and PSR75-12A power supplies use C13 power cords, and PSR180-56A, PSR360-56A, PSR720-56A, PSR1110-56A, PSR600-54A-B, PSR920-54A-B, and PSR1600-54A-B power supplies use C15 power cords (used in high temperature). Do not mix power cords for different power supplies.
- Provide a circuit breaker for each power supply and make sure the circuit breaker is off before installation.

Table 11 Power cord connection procedures at a glance

Power supply model	Available power source	Connection procedure reference
Built-in power supply	AC power source	Connecting the power cord for a built-in power supply
CA-70A12	AC power source	Connecting the power cord for a CA-70A12 or PSR75-12A power supply
PSR75-12A		
PSR150-D1	–48 VDC power source in the equipment room	Connecting the power cord for a PSR150-D1 or PSR560-56D
	RPS800-A or RPS1600-A	
PSR560-56D	–48 VDC power source in the equipment room	Connecting the power cord for a PSR150-D1 or PSR560-56D
	RPS1600-A	
PSR180-56A	AC power source	Connecting the power cord for a PSR180-56A, PSR360-56A, PSR720-56A, PSR1110-56A, PSR600-54A-B, PSR920-54A-B, or PSR1600-54A-B
	240 V HVDC power source	
PSR360-56A/PSR720-56A/PSR1110-56A	AC power source	

Power supply model	Available power source	Connection procedure reference
PSR600-54A-B/PSR920-54A-B/PSR1600-54A-B	AC power source	
	240 V HVDC power source	

Connecting the power cord for a built-in power supply

1. Wear an ESD wrist strap. Make sure the strap makes good skin contact and is reliably grounded.
2. Plug the female connector of the power cord into the power receptacle on the power supply, as shown in Figure 25.
3. Use a cable tie to secure the power cord to the handle of the power supply, as shown in Figure 25.
4. Connect the other end of the power cord to an AC power source.

Figure 25 Connecting the power cord for a built-in power supply(1)

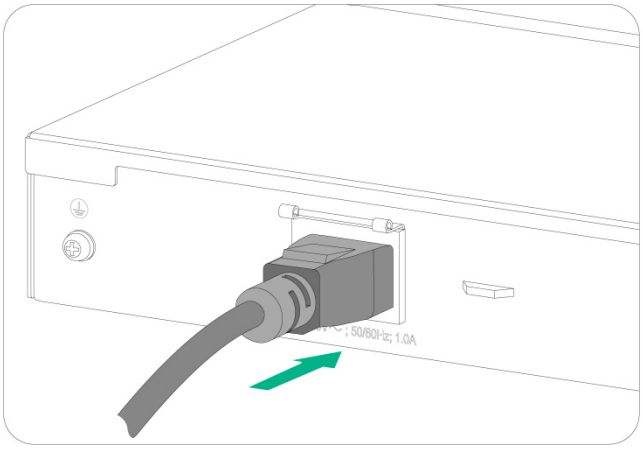

Figure 26 Connecting the power cord for a built-in power supply(2)

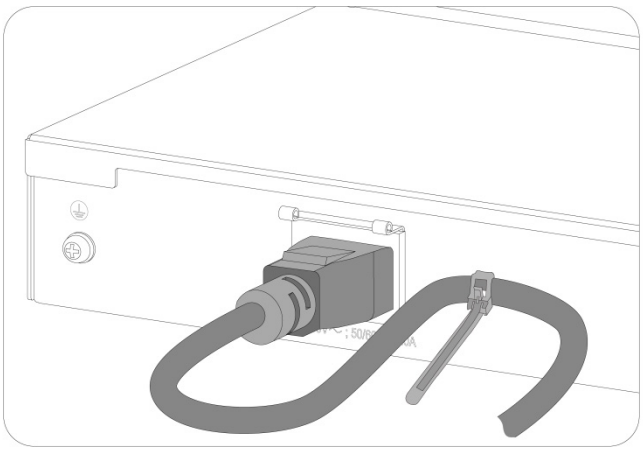

Connecting the power cord for a CA-70A12 or PSR75-12A power supply

The power cord connection procedure is similar for the CA-70A12 and PSR75-12A power supplies. The following procedure connects the power cord for a PSR75-12A power supply.

To connect the power cord for a PSR75-12A power supply:

1. Wear an ESD wrist strap and make sure it makes good skin contact and is reliably grounded.
2. Attach the power cord retainer clip (supplied with the power supply) into the two holes next to the AC-input power receptacle on the power supply, and pull the retainer clip leftwards (see Figure 27).
3. Connect the female connector of the AC power cord supplied with the power supply to the power receptacle (see callout 1 in Figure 28).
4. Pull the retainer clip rightwards to secure the connector to the AC-input power receptacle (see callout 2 in Figure 28).
5. Connect the other end of the power cord to an AC power source.

Figure 27 Connecting a power cord (1)

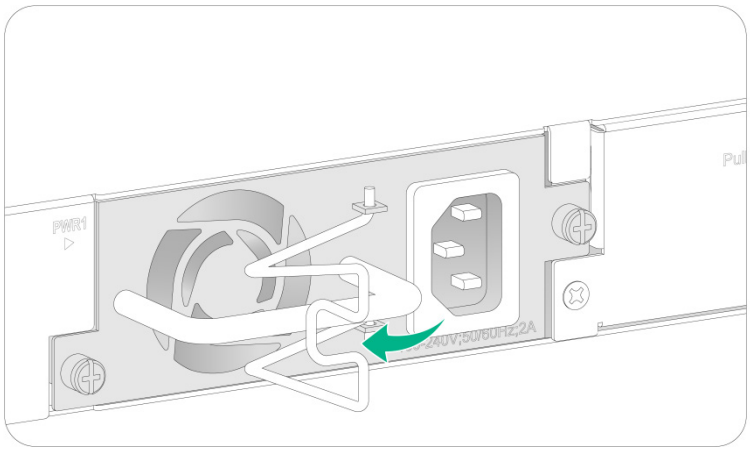

Figure 28 Connecting a power cord (2)

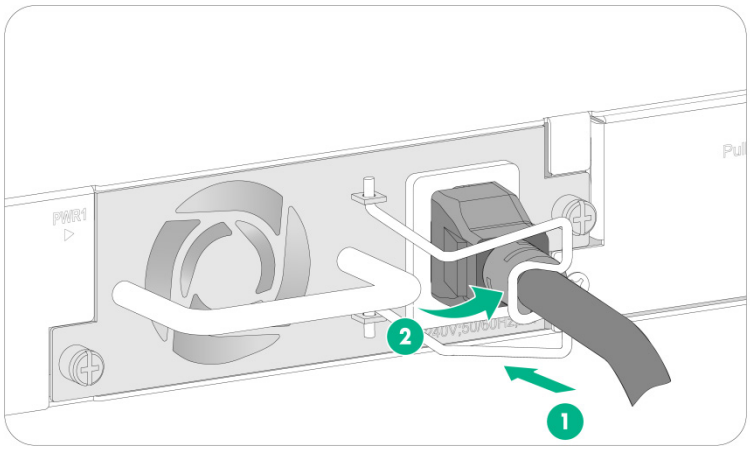

Connecting the power cord for a PSR150-D1 or PSR560-56D power supply

CAUTION:

- Connect the other ends of the wires for a PSR150-D1 power supply to a –48 VDC power source, with the negative wire (**–** or **L–**) to the negative terminal (**–**) and the positive wire (**+** or **M/N**) to the positive terminal (**+**).
- To use a –48 VDC power source to supply power to the power supply, use the DC power cord supplied with the power supply.
- To use an H3C RPS (–54 VDC) to supply power to the power supply, use a compatible RPS power cord to connect the RPS to the power supply.
- The power cord color code scheme in Figure 29 is for illustration only. The cable delivered for your country or region might use a different color scheme. When you connect the power cord, always identify the polarity symbol on its wires.

The power cord connection procedure is the same for the PSR150-D1 and PSR560-56D power supplies. The following procedure uses a PSR150-D1 power supply as an example.

To connect the power cord for a PSR150-D1 power supply:

1. Wear an ESD wrist strap and make sure it makes good skin contact and is reliably grounded.
2. Unpack the power cord, correctly orient the plug at one end of the cable with the power receptacle on the power supply, and insert the plug into the power receptacle (see callout 1 in Figure 29).

   The power receptacle is foolproof. If you cannot insert the plug into the receptacle, re-orient the plug rather than use excessive force to push it in.
3. Tighten the screws on the plug with a flat-blade screwdriver to secure the plug in the power receptacle (see callout 2 in Figure 29).
4. Connect the two wires at the other end of the power cord to a –48 VDC power source or an RPS.

Figure 29 Connecting the power cord for a PSR150-D1 power supply

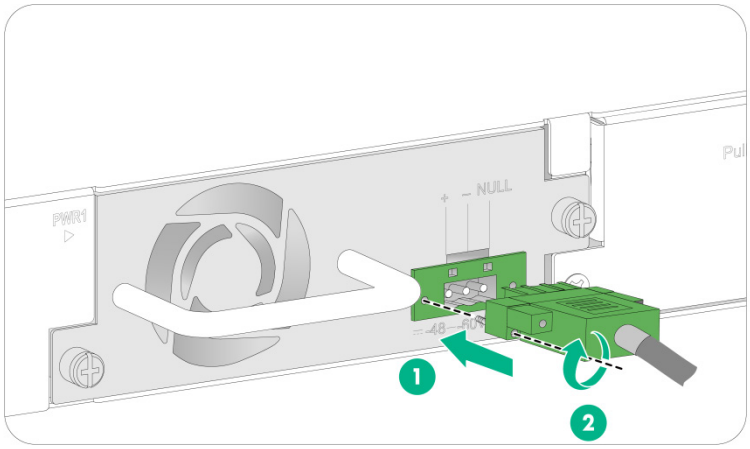

Connecting the power cord for a PSR180-56A, PSR360-56A, PSR720-56A, PSR1110-56A, PSR600-54A-B, PSR920-54A-B, or PSR1600-54A-B power supply

The power cord connection procedure is the same for the PSR180-56A, PSR360-56A, PSR720-56A, PSR1110-56A, PSR600-54A-B, PSR920-54A-B, and PSR1600-54A-B power supplies. The following procedure uses a PSR360-56A power supply as an example.

To connect the power cord for a PSR360-56A power supply:

1. Wear an ESD wrist strap and make sure it makes good skin contact and is reliably grounded.
2. Plug the female connector end of the power cord into the input socket of the power supply (see callout 1 in Figure 25).
3. Use a cable tie to secure the power cord to the handle of the power supply (see callout 2 and callout 3 in Figure 25).
4. Connect the other end of the power cord to a power source.

   For a PSR360-56A, PSR720-56A, or PSR1110-56A power supply, you can connect the power cord only to an AC power source. For a PSR180-56A, PSR600-54A-B, PSR920-54A-B, or PSR1600-54A-B power supply, you can connect the power cord to an AC or HVDC power source.

Figure 30 Connecting the power cord for a PSR360-56A power supply

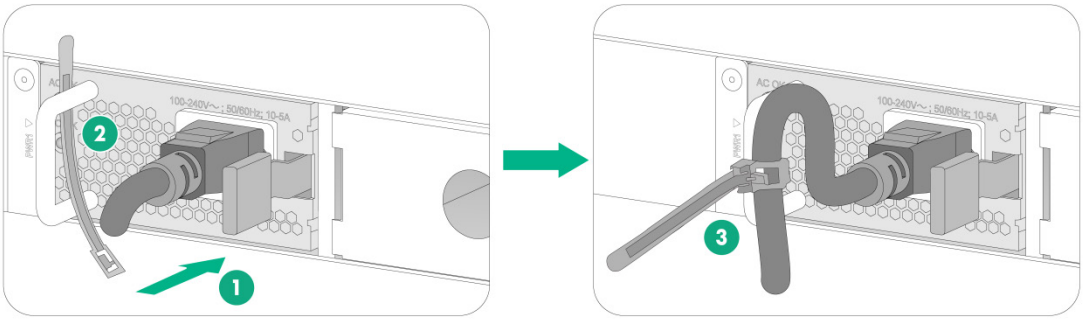

Verifying the installation

Before powering on the switch, verify the following items:

- There is enough space around the switch for heat dissipation.
- The rack or workbench on which the switch is mounted is stable.
- The grounding cable is securely connected.
- The power source specifications are as required by the device.
- The power cords are correctly connected.
- If part of the network cable for a port is routed outdoors, verify that a network port lightning protector is used for the port.
- If a power line is routed from outdoors, verify that a surge protected power strip is used for the switch.

NOTE:

For information about lightning protection for the switch, see *H3C Lightning Protection Guide*.

Accessing the switch for the first time

Connecting the switch to a configuration terminal

The S5170-EI series and S5570S-EI series switches each provide a serial console for connecting to a configuration terminal.

In Figure 31, the switch is connected to a configuration terminal (PC as an example) from the serial console port.

Figure 31 Connecting the switch to a configuration terminal

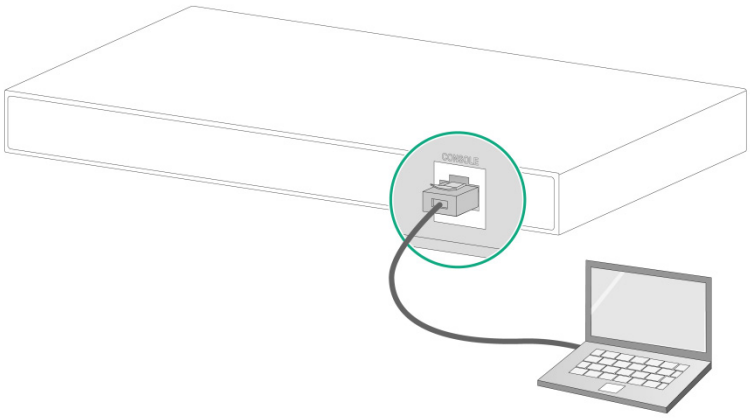

As shown in Table 12, two types of console cables can be used for connecting the switch to a configuration terminal.

Table 12 Connection methods and console cables

Connection method	Console cable type	Configuration terminal-side connector	Switch-side connector
Using the serial console port for connection	DB9-to-RJ45 console cable	DB-9 female connector	RJ-45 connector
	USB-to-RJ45 console cable	USB connector	RJ-45 connector

The signal pinout for a DB9-to-RJ45 console cable depends on the vendor of the cable. To avoid abnormal configuration terminal display, use a serial console cable provided by H3C. For more information, see Table 8. To prepare a serial console cable yourself, make sure the signal pinout for the RJ-45 connector is the same as that shown in Table 13.

Connecting a DB9-to-RJ45 console cable

CAUTION:

Follow these guidelines when you connect a DB9-to-RJ45 console cable:

- Identify the mark on the serial console port and make sure you are connecting to the correct port.
- The serial ports on PCs do not support hot swapping. To connect a PC to an operating switch, first connect the PC end. To disconnect a PC from an operating switch, first disconnect the switch end.

A DB9-to-RJ45 console cable is an 8-core shielded cable, with a crimped RJ-45 connector at one end for connecting to the serial console port of the switch, and a DB-9 female connector at the other end for connecting to the serial port on the console terminal.

Figure 32 DB9-to-RJ45 console cable

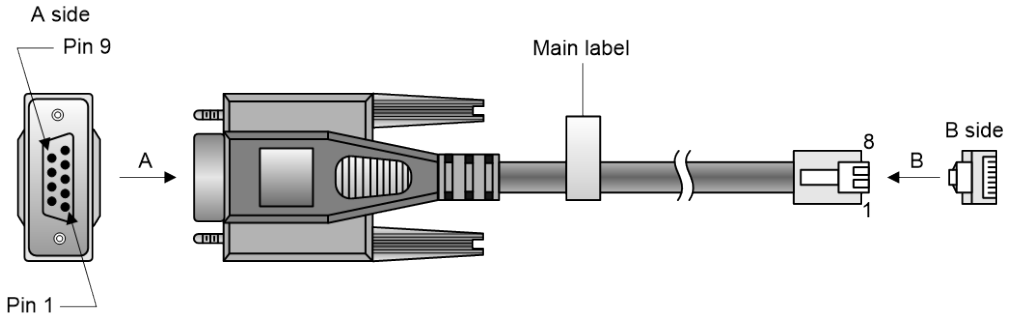

Table 13 DB9-to-RJ45 console cable signal pinout

RJ-45	Signal	DB-9	Signal
1	RTS	8	CTS
2	DTR	6	DSR
3	TXD	2	RXD
4	SG	5	SG
5	SG	5	SG
6	RXD	3	TXD
7	DSR	4	DTR
8	CTS	7	RTS

To connect the switch to a configuration terminal (for example, a PC) through a DB9-to-RJ45 console cable:

1. Plug the DB-9 female connector of the DB9-to-RJ45 console cable to the serial port on the PC.
2. Connect the RJ-45 connector to the serial console port on the switch.

Connecting a USB-to-RJ45 console cable

IMPORTANT:

- To use a USB-to-RJ45 console cable to connect the switch to a configuration terminal, first download and install the USB-to-RJ45 console driver on the configuration terminal and then connect the USB-to-RJ45 console cable to the configuration terminal.
- If you have connected a USB-to-RJ45 console cable to the configuration terminal before driver installation, you must remove and reconnect the USB-to-RJ45 console cable to the configuration terminal.

The following installs the driver on the Windows system. To install the driver on other operating systems, see the installation guide in the driver compression package named by the corresponding operating system.

To connect the switch to the configuration terminal through a USB-to-RJ45 console cable:

1. Click the following link, or copy it to the address bar on your browser and download the USB-to-RJ45 console driver.

   http://www.h3c.com/en/home/USB_to_RJ45_Console/

2. View the TXT file **Read me** in the Windows folder to check whether the Windows system of the configuration terminal supports the driver.
3. If the Windows system supports the driver, install **PL23XX-M_LogoDriver_Setup_v200_20190815.exe**.
4. Click **Next** on the welcome page of the driver installation wizard.

   Figure 33 Driver installation wizard

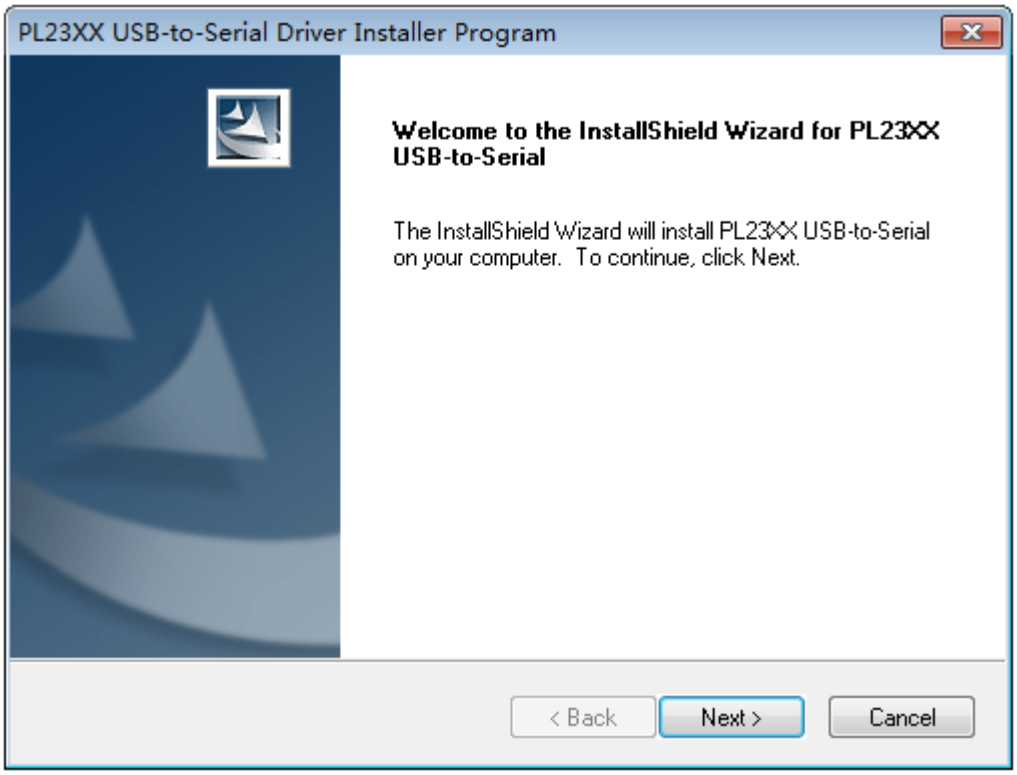

5. Click **Finish** after the drive installation is completed.

Figure 34 Finishing the driver installation

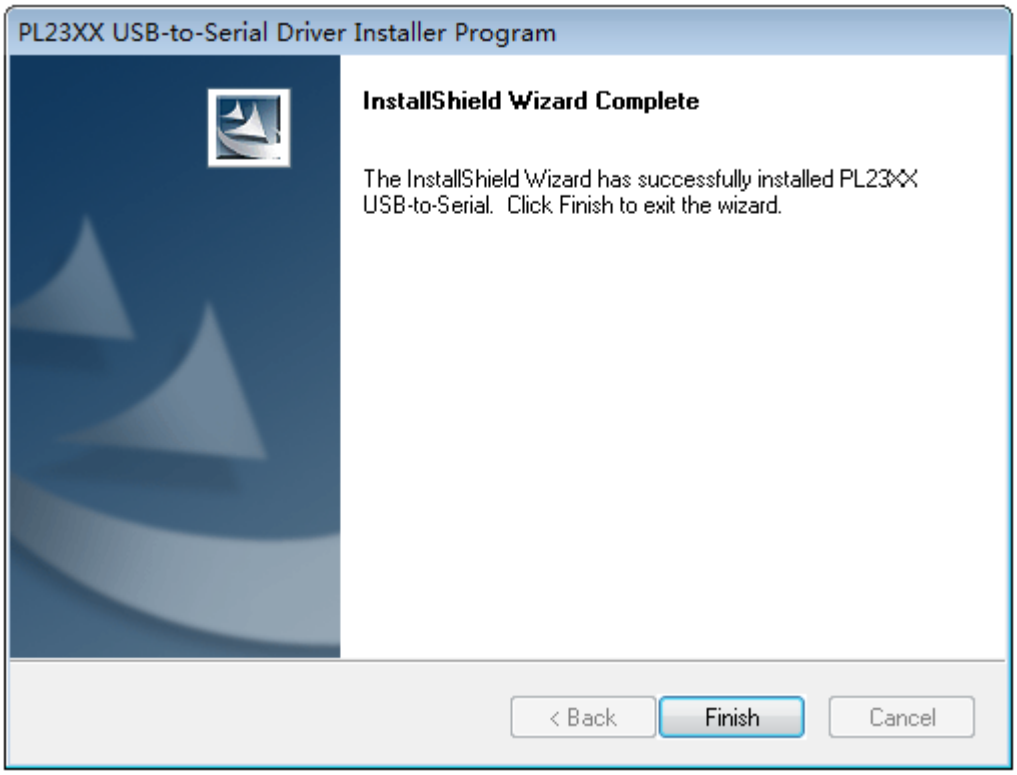

6. Connect the standard USB connector of the cable to the USB port of the configuration terminal.
7. Connect the RJ-45 connector of the cable to the console port of the switch.

Setting terminal parameters

To configure and manage the switch through the console port, you must run a terminal emulator program, such as TeraTermPro, on your configuration terminal. You can use the emulator program to connect a network device, a Telnet site, or an SSH site. For more information about the terminal emulator programs, see the user guides for these programs.

Configure the terminal parameters as follows:

- **Bits per second**—9,600.
- **Data bits**—8.
- **Parity**—None.
- **Stop bits**—1.
- **Flow control**—None.

Starting the switch

Pre-start checklist

Before powering on the switch, verify the following items:

- The power cord is correctly connected.
- The input power voltage is as required by the switch.

- The console cable is correctly connected.
- The PC has started, and the terminal parameters have been correctly configured.

Powering on the switch

During the startup process, you can access Boot ROM menus to perform tasks such as software upgrade and file management. The Boot ROM interface and menu options differ with software versions. For more information about Boot ROM menu options, see the software-matching release notes for the device.

After the startup process is completed, you can access the CLI to configure the switch.

For more information about the configuration commands, see the configuration guides and command references for the switch.

Setting up an IRF fabric

You can use H3C IRF technology to connect and virtualize S5170-EI or S5570S-EI switches into a large virtual switch called an "IRF fabric" for flattened network topology, and high availability, scalability, and manageability.

An S5170-EI or S5570S-EI switch can set up an IRF fabric only with switches from the same switch series.

IRF fabric setup flowchart

Figure 35 IRF fabric setup flowchart

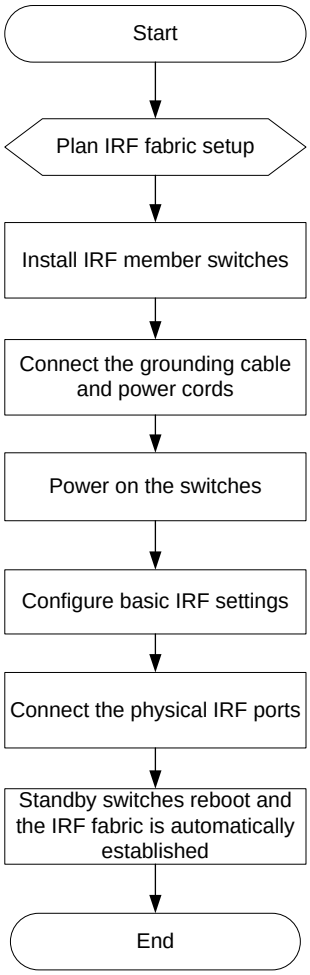

To set up an IRF fabric:

Step	Description
1. Plan IRF fabric setup	Plan the installation site and IRF fabric setup parameters: • Planning IRF fabric size and the installation site • Identifying the master switch and planning IRF member IDs • Planning IRF topology and connections • Identifying physical IRF ports on the member switches

Step	Description
	• Planning the cabling scheme
2. Install IRF member switches	See "Installing the switch in a 19-inch rack" or "Mounting the switch on a workbench."
3. Connect grounding cables and power cords	See "Grounding the switch" and "Connecting the power cord."
4. Power on the switches	N/A
5. Configure basic IRF settings	See the IRF configuration guide for the switch series.
6. Connect the physical IRF ports	Connect physical IRF ports on switches. All switches except the master switch automatically reboot, and the IRF fabric is established.

Planning IRF fabric setup

This section describes issues that an IRF fabric setup plan must cover.

Planning IRF fabric size and the installation site

Choose switch models and identify the number of required IRF member switches, depending on the user density and upstream bandwidth requirements. The switching capacity of an IRF fabric equals the total switching capacities of all member switches.

Plan the installation site depending on your network solution, as follows:

- Place all IRF member switches in one rack for centralized high-density access.
- Distribute the IRF member switches in different racks to implement the ToR access solution for a data center.

NOTE:

For the maximum IRF member devices supported by the switch, see the release notes that come with the switch.

Identifying the master switch and planning IRF member IDs

Determine which switch you want to use as the master for managing all member switches in the IRF fabric.

An IRF fabric has only one master switch. You configure and manage all member switches in the IRF fabric at the CLI of the master switch. IRF member switches automatically elect a master.

You can affect the election result by assigning a high member priority to the intended master switch. For more information about master election, see the configuration guides and command references for the switch.

Prepare an IRF member ID assignment scheme. An IRF fabric uses member IDs to uniquely identify and manage its members, and you must assign each IRF member switch a unique member ID.

Planning IRF topology and connections

You can create an IRF fabric in daisy chain topology or more reliable ring topology. In ring topology, the failure of one IRF link does not cause the IRF fabric to split as in daisy chain topology. Instead, the IRF fabric changes to a daisy chain topology without interrupting network services.

You connect the IRF member switches through IRF ports, the logical interfaces for the connections between IRF member switches. Each IRF member switch has two IRF ports: IRF-port 1 and IRF-port 2. To use an IRF port, you must bind a minimum of one physical port to it.

When connecting two neighboring IRF member switches, you must connect the physical ports of IRF-port 1 on one switch to the physical ports of IRF-port 2 on the other switch. See Table 14 for the available IRF physical ports. You can bind several IRF physical ports to an IRF port for increased bandwidth and availability.

Figure 36 and Figure 37 show the topologies of an IRF fabric made up of three S5170-28S-EI switches. The IRF port connections in the two figures are for illustration only, and more connection methods are available.

Figure 36 IRF fabric in daisy chain topology

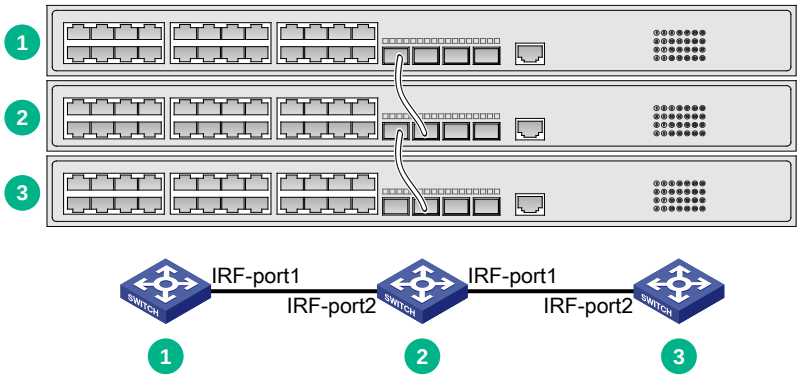

Figure 37 IRF fabric in ring topology

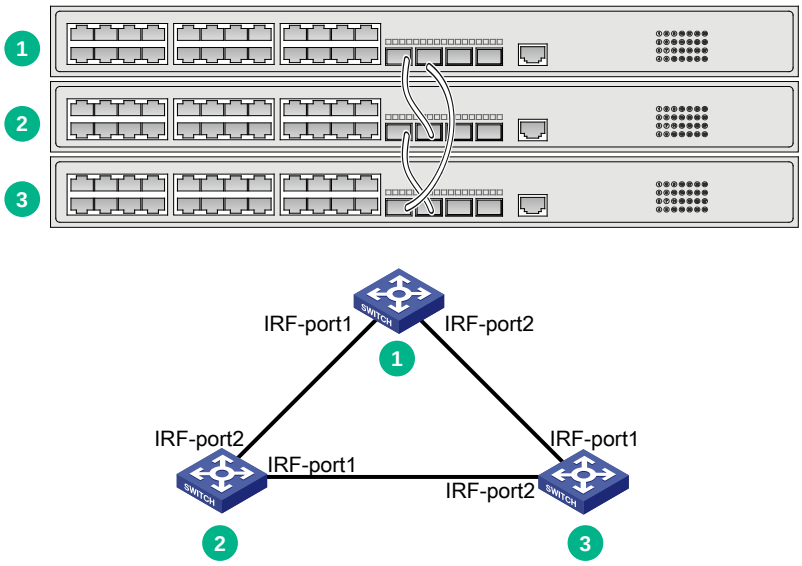

Identifying physical IRF ports on the member switches

Identify the physical IRF ports on the member switches according to your topology and connection scheme.

Table 14 shows the physical ports that can be used for IRF connection and the port use restrictions.

Table 14 Candidate physical IRF ports and their use restrictions

<table>
<tr><th>Chassis</th><th>Candidate physical IRF ports</th><th>Use restrictions</th></tr>
<tr><td>S5570S-54F-EI</td><td>• SFP+ ports on the front panel
• SFP ports</td><td rowspan="4">• Physical ports on interface modules and the front panel can be bound to the same IRF logical interface.
• All physical ports to be bound to an IRF logical interface must have the same data rate.
• A 10/100/1000BASE-T autosensing Ethernet port or SFP port can be used as an IRF physical port only when it operates at 1 Gbps.
• A 100BASE-TX/1000BASE-T/2.5GBASE-T autosensing Ethernet port can be used as an IRF physical port only when it operates at 2.5 Gbps.
• An SFP+ port can be used as an IRF physical port only when it operates at 10 Gbps.
• For a switch that has six SFP+ ports, use the four SFP+ ports with the highest numbers as IRF ports. For a switch that has four SFP+ ports, use the two SFP+ ports with the highest numbers as IRF ports. Using these ports as IRF ports can prevent issues such as IRF split, because IRF protocol packets from these ports can be forwarded in a queue with a higher priority.</td></tr>
<tr><td>S5170-36F-EI
S5170-36F-EI-DP
S5570S-36F-EI</td><td>• SFP+ and SFP ports on the front panel
• 10/100/1000BASE-T autosensing Ethernet ports on the front panel</td></tr>
<tr><td>S5170-28S-EI
S5170-54S-EI
S5170-54S-EI-DP
S5170-28S-HPWR-EI
S5170-54S-PWR-EI
S5570S-28S-EI
S5570S-54S-EI
S5570S-28S-HPWR-EI
S5570S-54S-PWR-EI
S5570S-28S-HPWR-EI-A
S5570S-54S-PWR-EI-A</td><td>• SFP+ ports on the front panel
• 10/100/1000BASE-T autosensing Ethernet ports on the front panel</td></tr>
<tr><td>S5570S-30MS-UPWR-EI</td><td>• SFP+ ports on the front panel
• 100BASE-TX/1000BASE-T/2.5GBASE-T autosensing Ethernet ports</td></tr>
</table>

Planning the cabling scheme

Use the following cables to connect the IRF physical ports on the switch:

- **10/100/1000BASE-T autosensing Ethernet port**—Category 5 or above twisted-pair cable.
- **100BASE-TX/1000BASE-T/2.5GBASE-T autosensing Ethernet port**—Category 5e or above twisted-pair cable.
- **SFP port**—GE SFP fiber transceiver module and optical fiber, GE SFP copper transceiver module and twisted pair cable or GE SFP cable. For the available transceiver models and cables, see ports in *H3C S5170-EI & S5570S-EI Switch Series Hardware Information and Specifications*.

- **SFP+ port**—SFP+ fiber transceiver module and optical fiber or SFP+ cable. For the available transceiver models and cables, see ports in *H3C S5170-EI & S5570S-EI Switch Series Hardware Information and Specifications*.

For a short-distance IRF connection in an equipment room, use a twisted pair/SFP+/SFP cable.

For a long-distance IRF connection, use transceiver modules and optical fibers.

The following subsections describe several H3C recommended IRF connection schemes by using SFP+ cables and SFP+ transceiver modules and fibers. All these schemes use a ring topology.

IMPORTANT:

In these schemes, all physical IRF ports are located on the same side. If physical IRF ports are on different sides, you must measure the distance between them to select an appropriate cable.

Connecting the IRF member switches in one rack

Connect the IRF member switches (4 switches in this example) in a rack as shown in Figure 38. The switches in the ring topology (see Figure 39) are in the same order as connected in the rack.

Figure 38 Connecting the switches in one rack

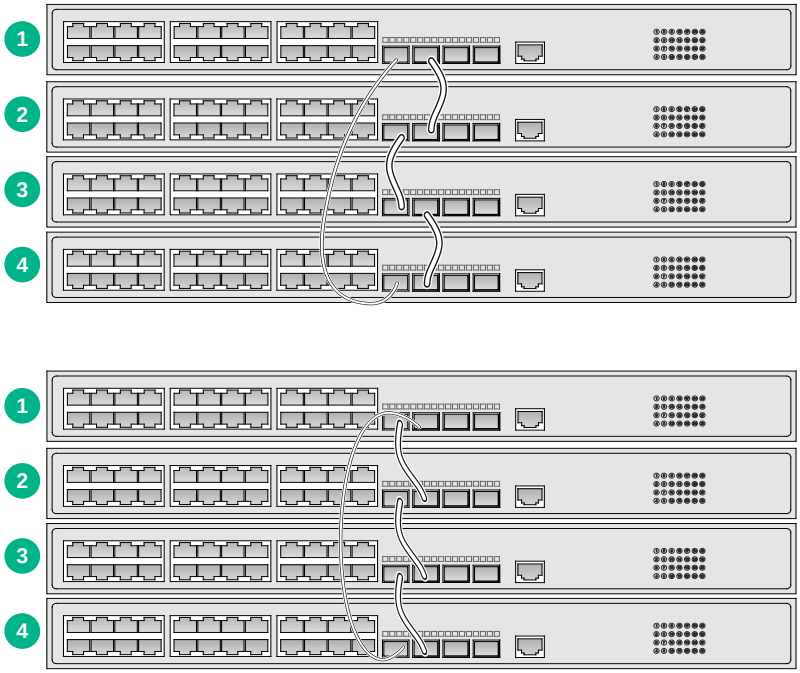

Figure 39 IRF fabric topology

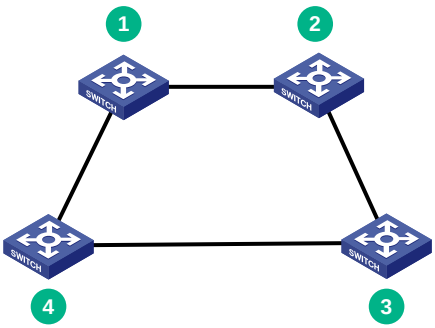

Connecting the IRF member switches in a ToR solution

You can install IRF member switches in different racks side by side to deploy a top of rack (ToR) solution.

Figure 40 ToR cabling

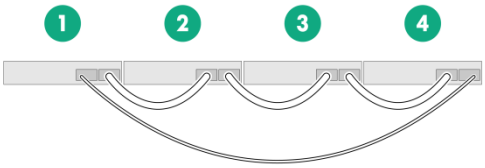

Configuring basic IRF settings

After you install the IRF member switches, power on the switches, and log in to each IRF member switch to configure their member IDs, member priorities, and IRF port bindings.

Follow these guidelines when you configure the switches:

- Assign the master switch higher member priority than any other switch.
- Bind physical ports to IRF port 1 on one switch and to IRF port 2 on the other switch. You perform IRF port binding before or after connecting IRF physical ports depending on the software release.
- To bind the ports on an interface module to an IRF port, you must install the interface module first.
- Execute the **`display irf configuration`** command to verify the basic IRF settings.

For more information about configuring basic IRF settings, see IRF configuration in the configuration guide for the switch.

Connecting the physical IRF ports

Connect the IRF member switches as planned.

Wear an ESD wrist strap when you connect cables or transceiver modules and fibers. For how to connect them, see *H3C Transceiver Modules and Network Cables Installation Guide*.

Verifying the IRF fabric setup

To verify the basic functionality of the IRF fabric after you finish configuring basic IRF settings and connecting IRF ports:

1. Log in to the IRF fabric through the console port of any member switch.
2. Create a Layer 3 interface, assign it an IP address, and make sure the IRF fabric and the remote network management station can reach each other.
3. Use Telnet, web, or SNMP to access the IRF fabric from the network management station. (See the configuration guides and command references for the switch.)
4. Verify that you can manage all member switches as if they were one node.
5. Display the running status of the IRF fabric by using the commands in Table 15.

Table 15 Displaying and maintaining IRF configuration and running status

Task	Command
Display information about the IRF fabric.	**`display irf`**
Display all members' IRF configurations that take effect at a reboot.	**`display irf configuration`**
Display IRF fabric topology information.	**`display irf topology`**

NOTE:

To avoid IP address collision and network problems, configure a minimum of one multi-active detection (MAD) mechanism to detect the presence of multiple identical IRF fabrics and handle collisions. For more information about MAD detection, see IRF configuration in the configuration guides for the switch.

Maintenance and troubleshooting

Power supply failure

Built-in power supply failure

The S5170-EI switch series uses built-in power supplies.

- **S5170-28S-EI, S5170-54S-EI, S5170-54S-EI-DP, S5170-28S-HPWR-EI, S5170-54S-PWR-EI, and S5170-36F-EI**—You can observe the system status LED on the switch to identify power supply failure.
- **S5170-36F-EI-DP**—You can observe the system status LED and AC power status LEDs on the switch to identify power supply failure.

Symptom

- **S5170-28S-EI, S5170-54S-EI, S5170-54S-EI-DP, S5170-28S-HPWR-EI, S5170-54S-PWR-EI, and S5170-36F-EI**—The system status LED on the switch is off.
- **S5170-36F-EI-DP**—The system status LED is off, or the system status LED is on but one of the AC power status LEDs is off when you use two power supplies.

Solution

To resolve the issue:

1. Verify that the power receptacle on the switch is in good condition.
2. Verify that the power cord is correctly connected.
3. Verify that the power source is operating correctly.
4. Verify that the operating temperature of the switch is in the acceptable range, and the power supply has good ventilation. Overtemperature can cause the power supply to stop working and enter protection mode.
5. If the issue persists, contact H3C Support.

Removable power supply failure

The S5570S-EI switch series uses removable power supplies.

- **S5570S-28S-EI, S5570S-54S-EI, S5570S-36F-EI, and S5570S-54F-EI**—You can observe the power supply status LEDs (PWR1 and PWR2) on the switch to identify power supply failure.
- **S5570S-28S-HPWR-EI, S5570S-28S-HPWR-EI-A, S5570S-54S-PWR-EI, S5570S-54S-PWR-EI-A, and S5570S-30MS-UPWR-EI**—You can observe the power supply status LEDs (PWR1 and PWR2) on the switch in combination with the status LEDs on the power supplies to identify power supply failure.

For more information, see *H3C S5170-EI & S5570S-EI Switch Series Hardware Information and Specifications*, *H3C PSR180-56A Power Module User Manual, H3C PSR180-56A Power Module User Manual*, *H3C PSR360-56A Power Module User Manual*, *H3C PSR560-56D Power Module User Manual*, *H3C PSR720-56A Power Module User Manual*, *H3C PSR1110-56A Power Module User Manual*, *H3C PSR600-54A-B Power Module User Manual*, *H3C PSR920-54A-B Power Module User Manual*, and *H3C PSR1600-54A-B Power Module User Manual*.

Symptom

The status LED indicates a power supply failure.

Solution

To resolve the issue:

1. Verify that the power supply model is as required by the switch.
2. Verify that the power supply is securely installed in the switch.
3. Verify that the power cord is connected correctly.
4. Verify that the power source is operating correctly.
5. Verify that the electrical outlet is operating correctly.
6. Verify that the operating temperature of the switch is in an acceptable range and the power supply has good ventilation.
7. If the issue persists, contact H3C Support.

To replace a power supply, see "Installing and removing a power supply."

Fan tray failure

Symptom

The system status LED on the switch indicates a fan tray failure.

Solution

When a fan tray issue occurs, contact H3C Support.

Configuration terminal display issues

If the configuration environment setup is correct, the configuration terminal displays booting information when the switch is powered on. If the setup is incorrect, the configuration terminal displays nothing or garbled text.

No display

Symptom

The configuration terminal does not have display when the switch is powered on.

Solution

To resolve the issue:

1. Verify that the power supply is supplying power to the switch correctly.
2. Verify that the console cable is correctly connected.
3. Verify that the console cable does not have any issues and the terminal settings are correct.
4. If the issue persists, contact H3C Support.

Garbled display

Symptom

The display on the configuration terminal is garbled.

Solution

To resolve the issue:

1. Verify that the following settings are configured for the terminal:
   - **Baud rate**—9,600.

- **Data bits**—8.
- **Stop bits**—1.
- **Parity**—None.
- **Flow control**—None.

2. If the issue persists, contact H3C Support.